The Index Framing System (IFS)

imagine cabins

Floor Module Library Instructions

SAFETY & BUILDING CODES

Imagine Cabins - Index Framing System

Copyright (c) 2026 Imagine Cabins LLC. All rights reserved.

These instructions and drawings are for the purchaser's use in assembling the described modules. Unauthorized copying, redistribution, or resale of this document is prohibited.

Safety

- Wear eye, hearing, and hand protection. Use dust protection when cutting.
- Follow each tool maker's instructions. Keep guards in place.
- Secure work before cutting or fastening. Watch for pinch points and kickback.
- Treat nailers and similar tools as ready to fire until proven safe.
- Long lumber and assembled modules are heavy and awkward - lift carefully and get help when needed.
- Work from stable footing. Do not stand on unbraced framing.
- Keep bystanders and children out of the work area.
- Locate utilities before cutting into existing work. **CALL 811 Prior to any digging or excavation**
- If a step is beyond your skill or unsafe for the site, stop and get qualified help.

Building codes

These instructions show how to assemble indexed wood-framing modules with common lumber and fasteners. They are not a site-specific engineering design, permit drawing set, or approval from any building department.

You must follow all applicable local building codes, zoning rules, and permit conditions. Where your building department requires it, have a licensed structural engineer (or other required design professional) review and approve the work for your site and loads before you build.

INDEX PAGE

SECTION	TYPE	PAGES
Safety & Building Codes		1
SKU Breakout		3–4
Tools Needed		5
Common Assembly Steps		6–9
Module Selection		10–11
Blank Connector		12–16
6' Floor Modules	Blank / 2x6 Ends	17–22
8' Floor Modules	Blank / 2x6 Ends	23–28
10' Floor Modules	Blank / 2x6 Ends	29–34
12' Floor Modules	Blank / 2x6 Ends	35–40
14' Floor Modules	Blank / 2x6 Ends	41–46

SKU Breakout

FM101206B

FM = Index Framing System (IFS) Floor Module

10 = 2x10 Graded Lumber (1.5″ x 9.25″ actual)

12 = 12′ Span Length

06 = IFS 2x6 Wall module ready end 1

B = Blank end, Blank adapter ready

SKU Breakout

FM10120606

FM = Index Framing System (IFS) Floor Module

10 = 2x10 Graded Lumber (1.5" x 9.25" actual)

12 = 12' Span Length

06 = IFS 2x6 Wall module ready end 1

06 = IFS 2x6 Wall module ready end 2




25

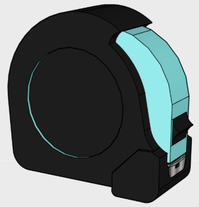

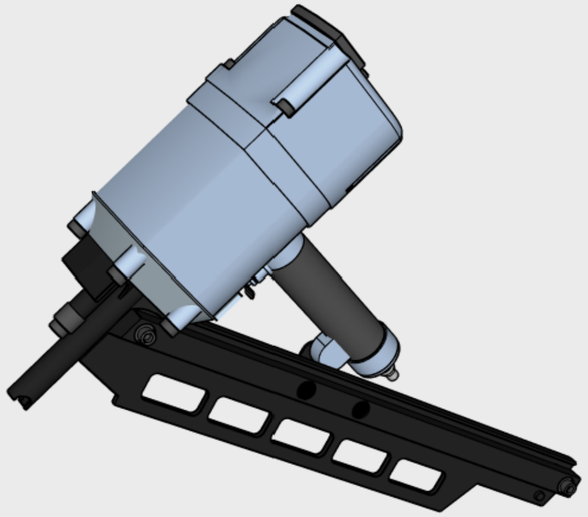

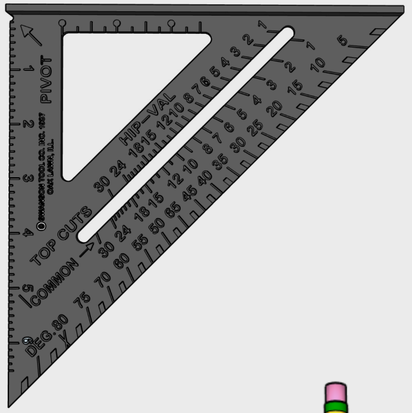
PIVOT
HIP—VAL
TOP CUTS
COMMON
DEG.

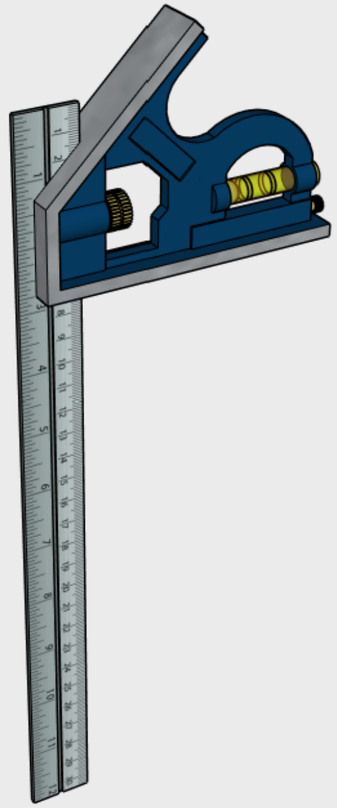



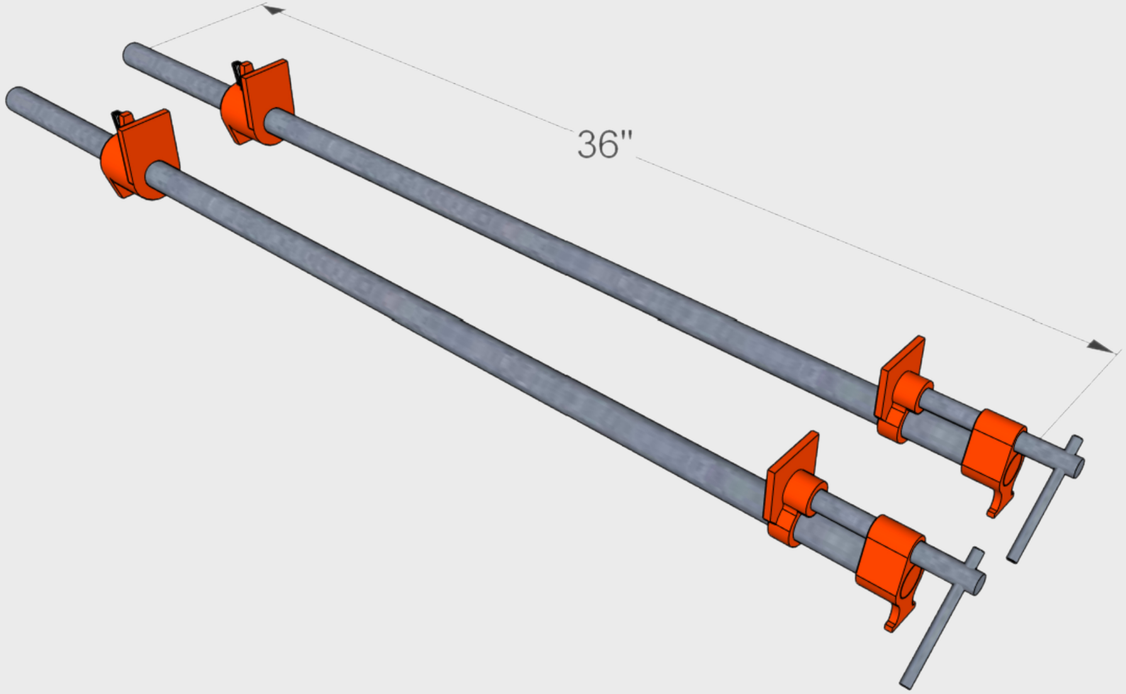
36"

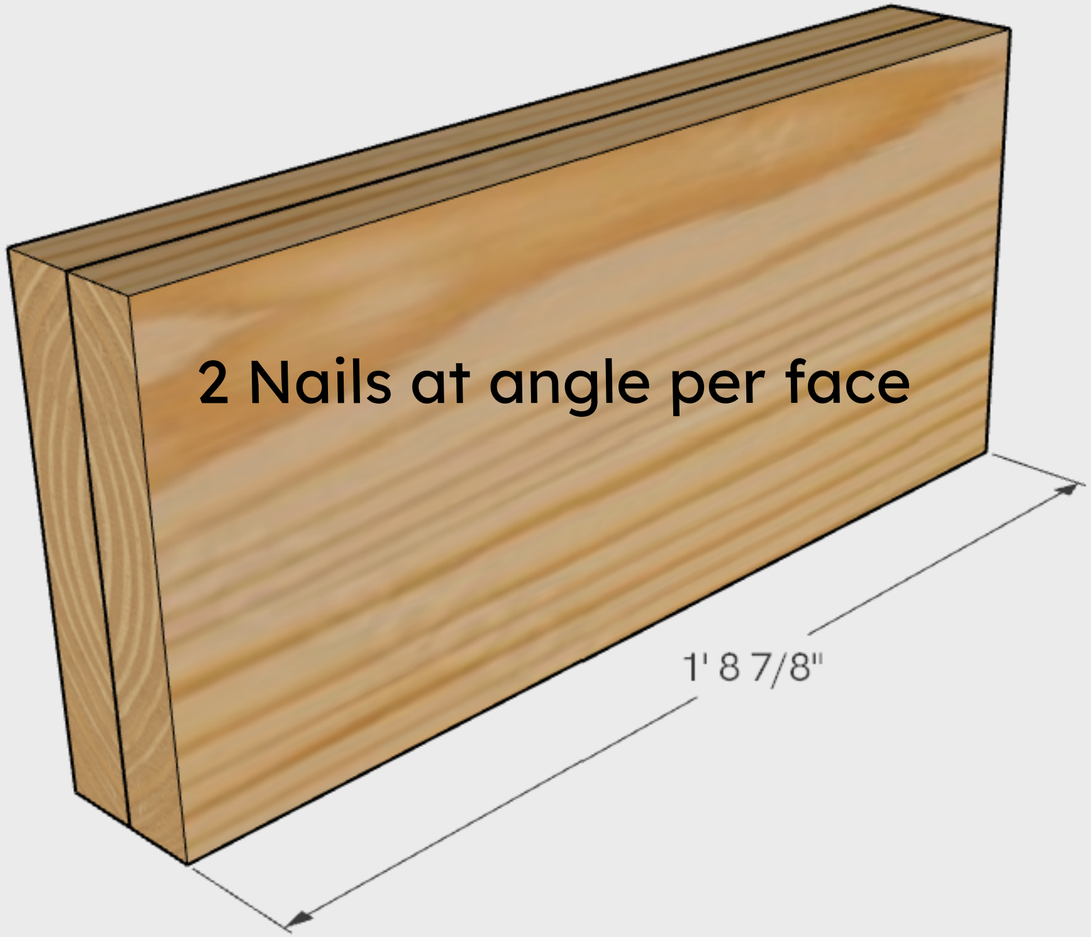
2 Nails at angle per face
1' 8 7/8"

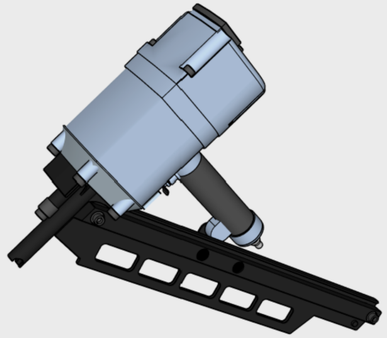

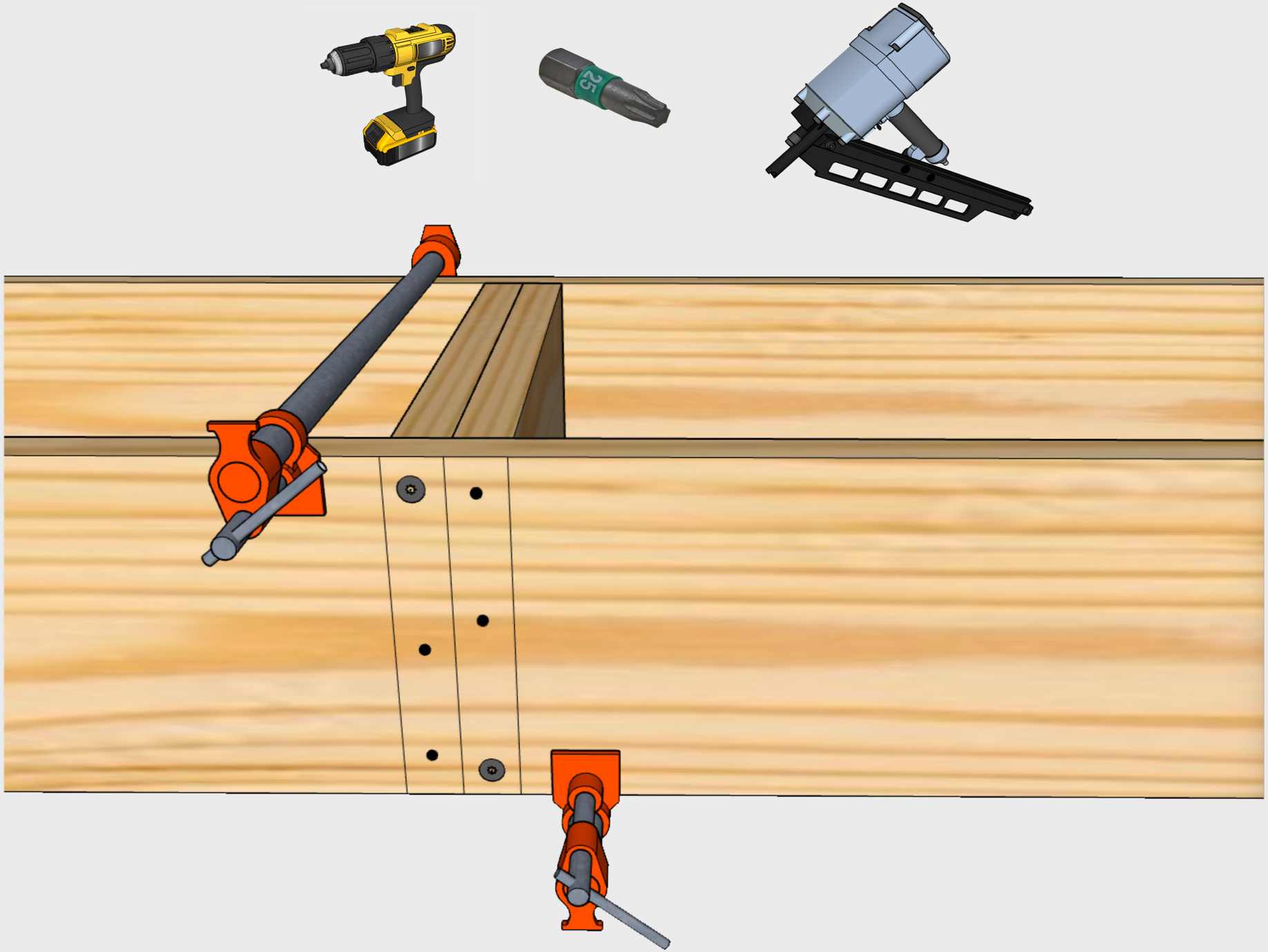
25



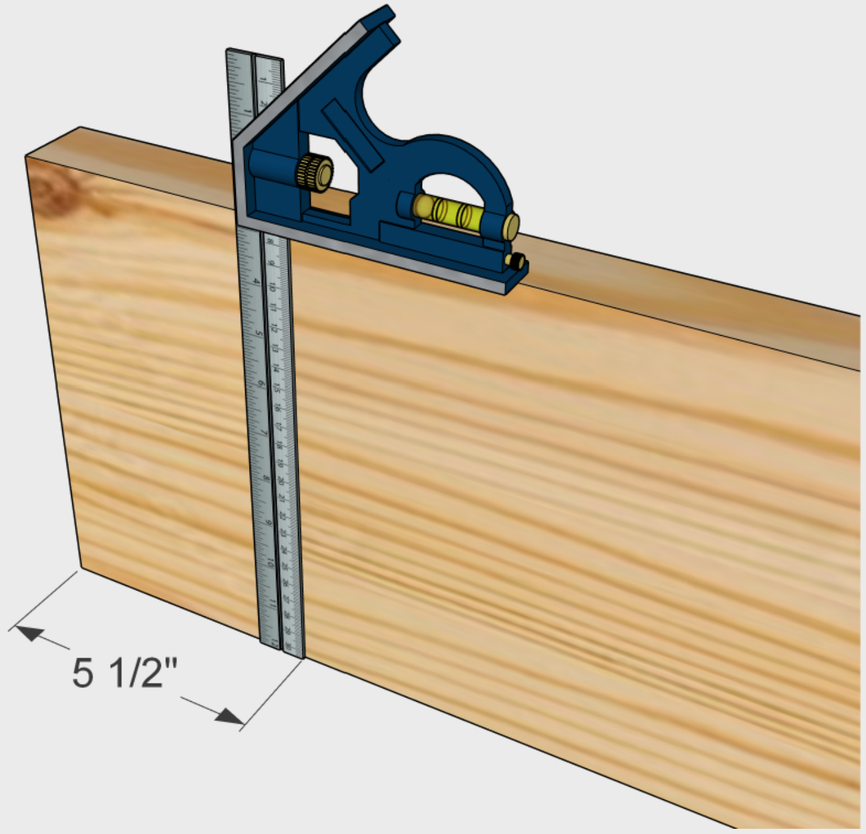
5 1/2"

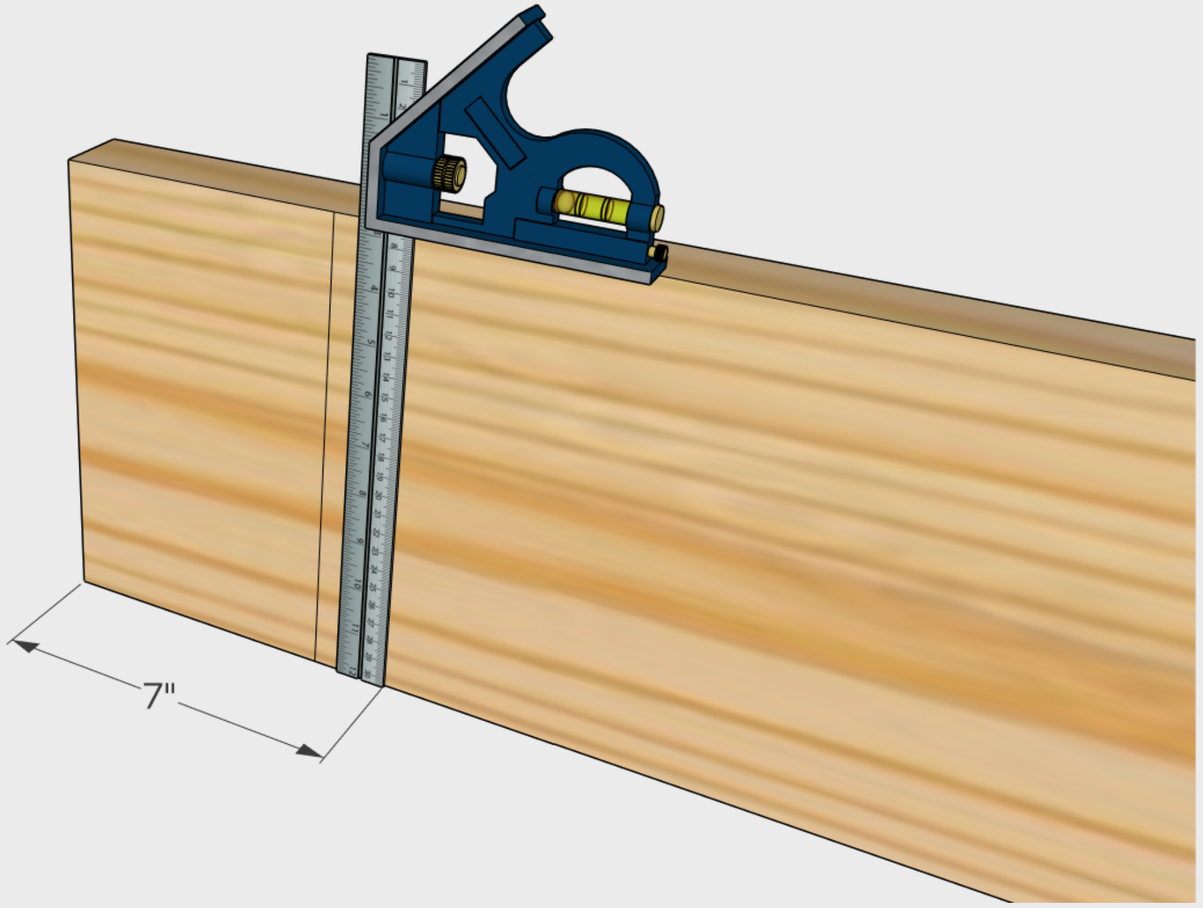
7"

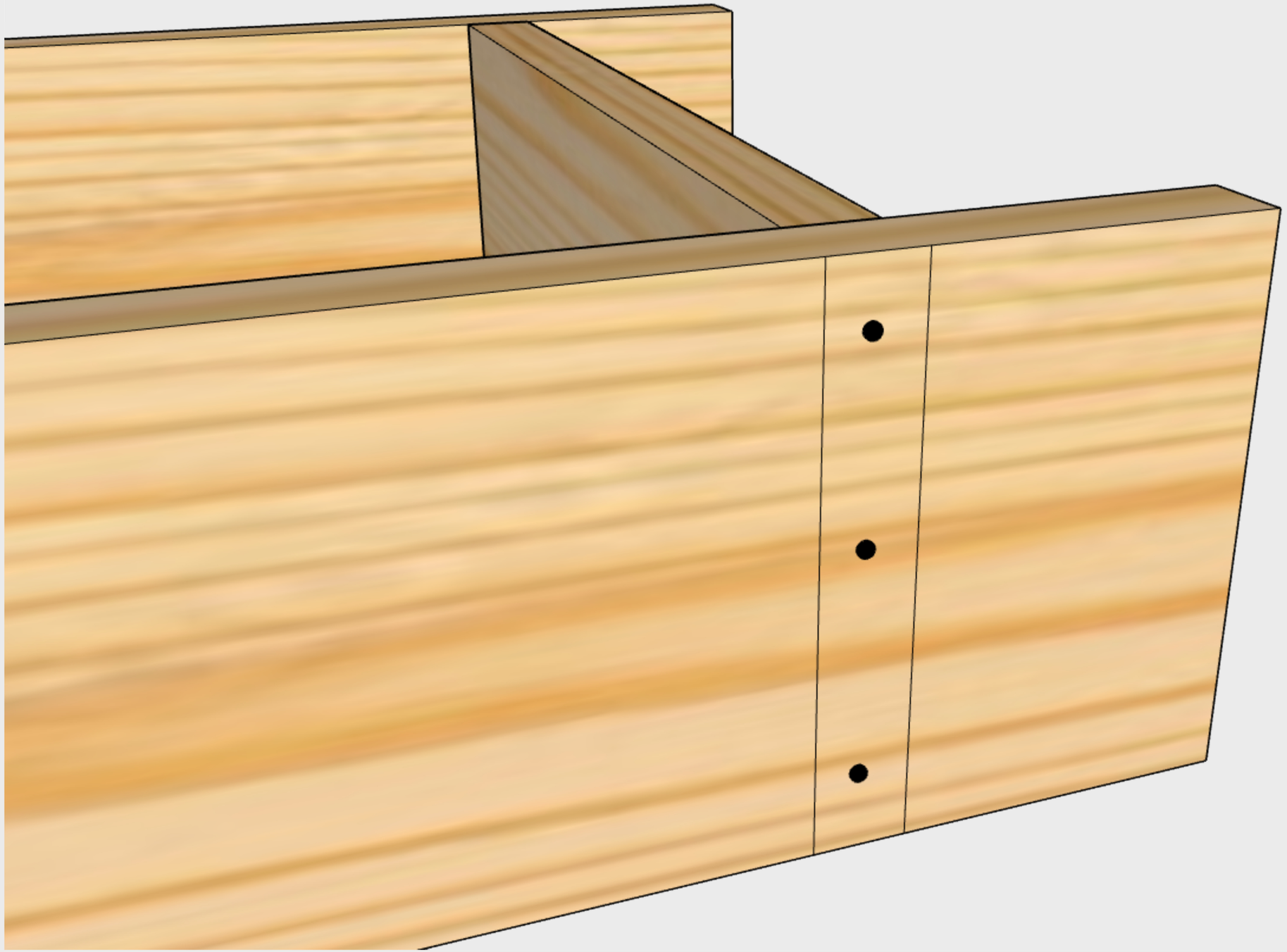

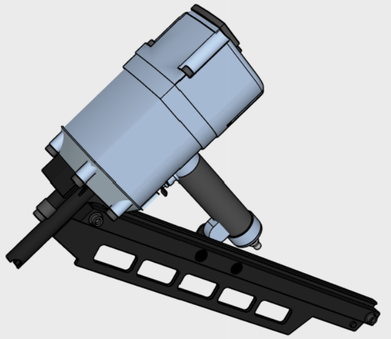

JOIST	SPAN	END 1	END 2	MODULE	PAGE
2x8	6'	2x6 IFS Wall	Blank	**FM080606B**	
2x8	6'	2x6 IFS Wall	2x6 IFS Wall	**FM08060606**	
2x8	8'	2x6 IFS Wall	Blank	**FM080806B**	
2x8	8'	2x6 IFS Wall	2x6 IFS Wall	**FM08080606**	
2x8	10'	2x6 IFS Wall	Blank	**FM081006B**	
2x8	10'	2x6 IFS Wall	2x6 IFS Wall	**FM08100606**	

JOIST	SPAN	END 1	END 2	MODULE	PAGE
2x10	6'	2x6 IFS Wall	Blank	**FM100606B**	
2x10	6'	2x6 IFS Wall	2x6 IFS Wall	**FM10060606**	
2x10	8'	2x6 IFS Wall	Blank	**FM100806B**	
2x10	8'	2x6 IFS Wall	2x6 IFS Wall	**FM10080606**	
2x10	10'	2x6 IFS Wall	Blank	**FM101006B**	
2x10	10'	2x6 IFS Wall	2x6 IFS Wall	**FM10100606**	
2x10	12'	2x6 IFS Wall	Blank	**FM101206B**	
2x10	12'	2x6 IFS Wall	2x6 IFS Wall	**FM10120606**	

Blank Connector - 2x8, 2x10, 2x12

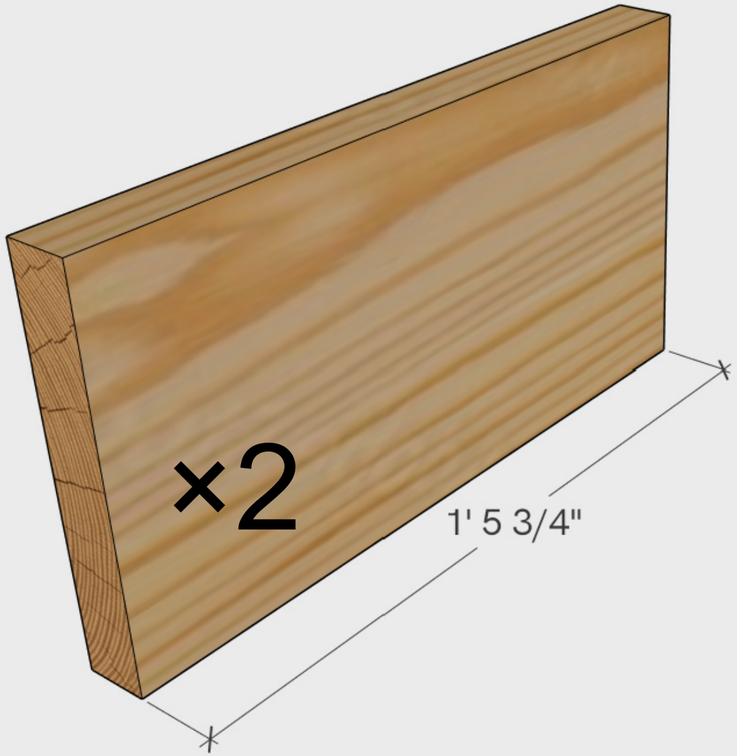

Bridge Length: 17 3/4"

Joist Lap Length: 42"

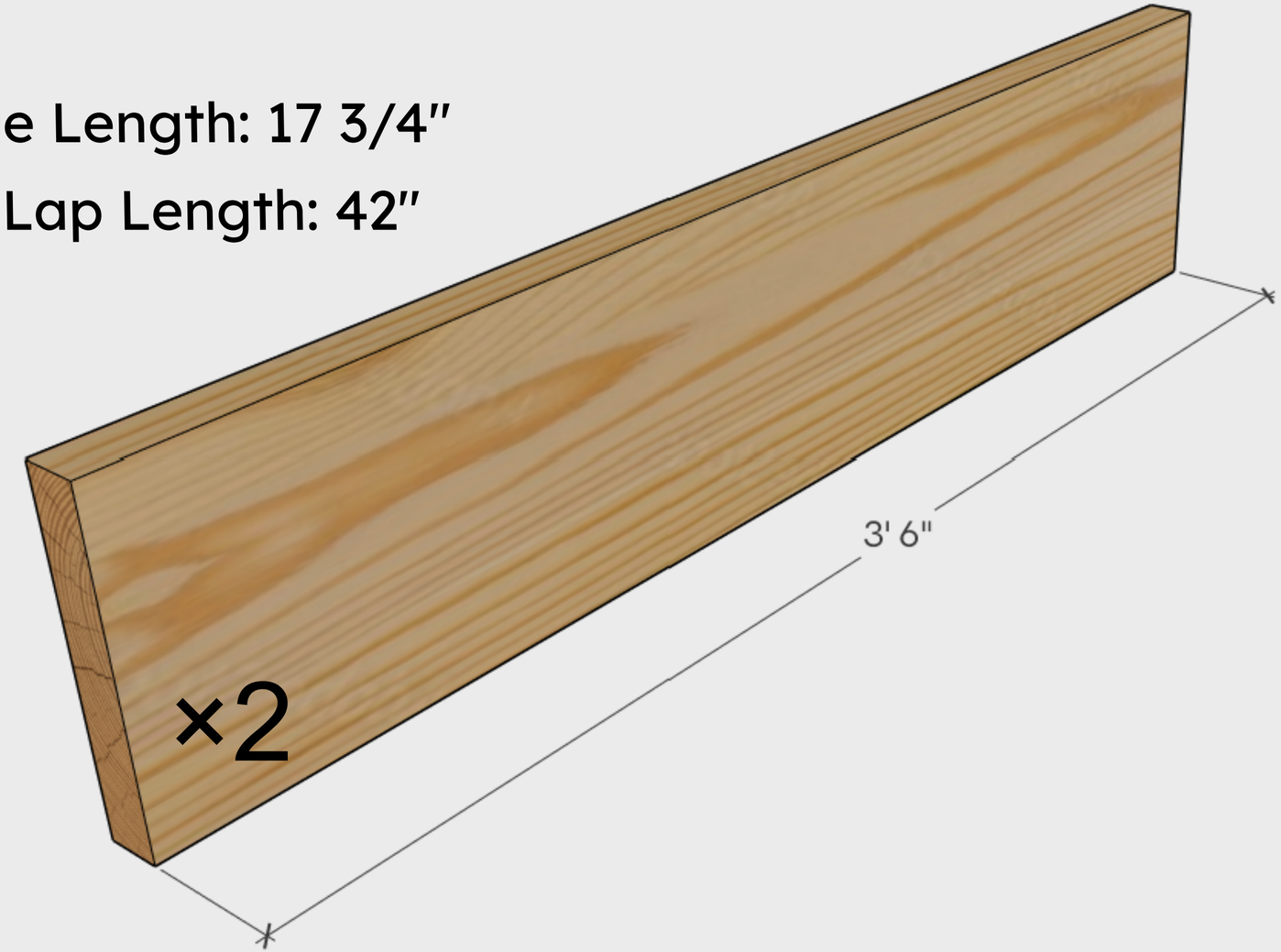

Blank Connector

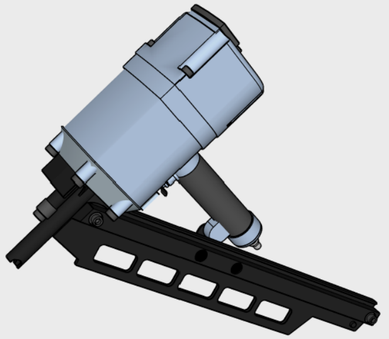

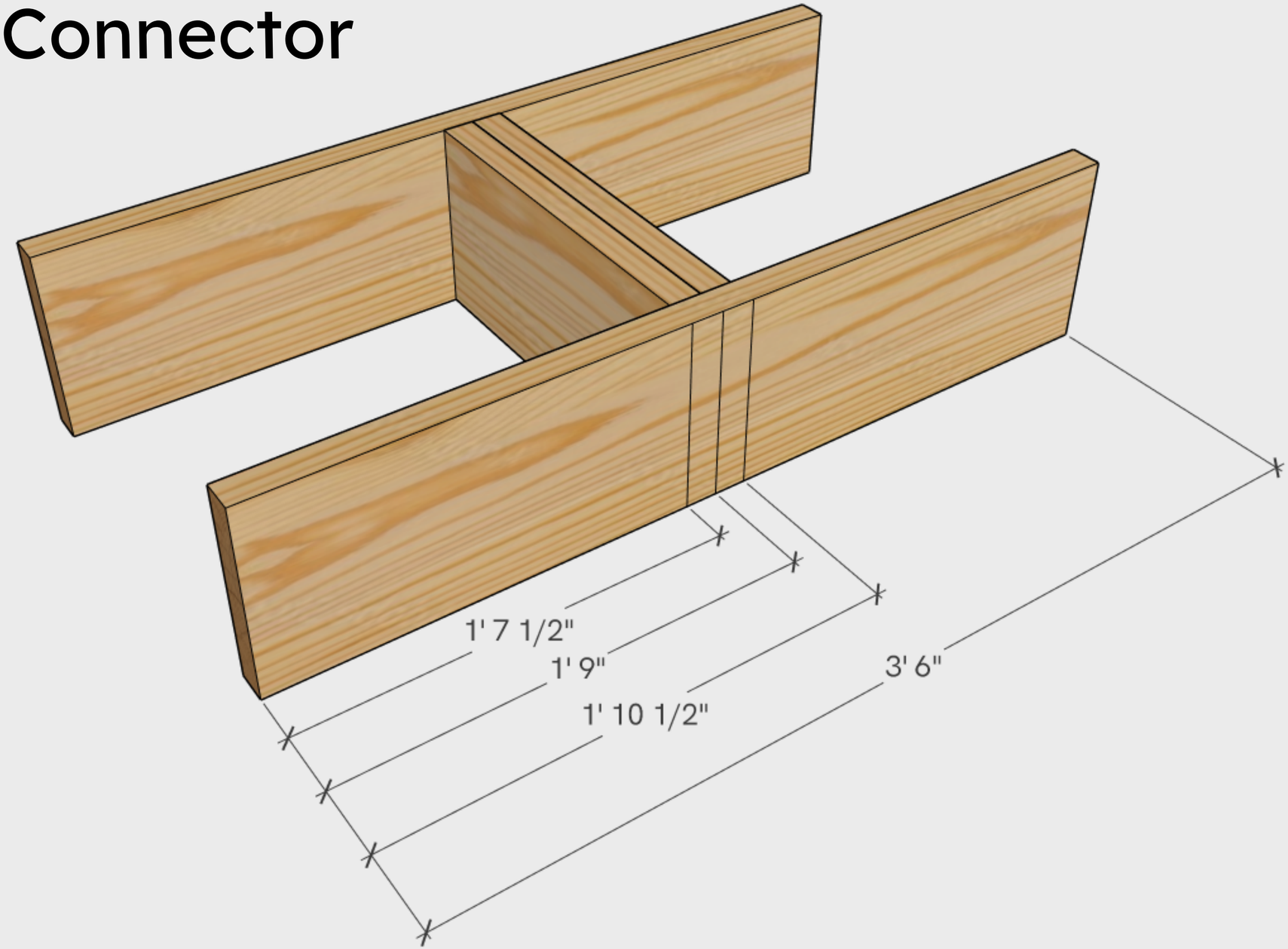

FMxx0606B

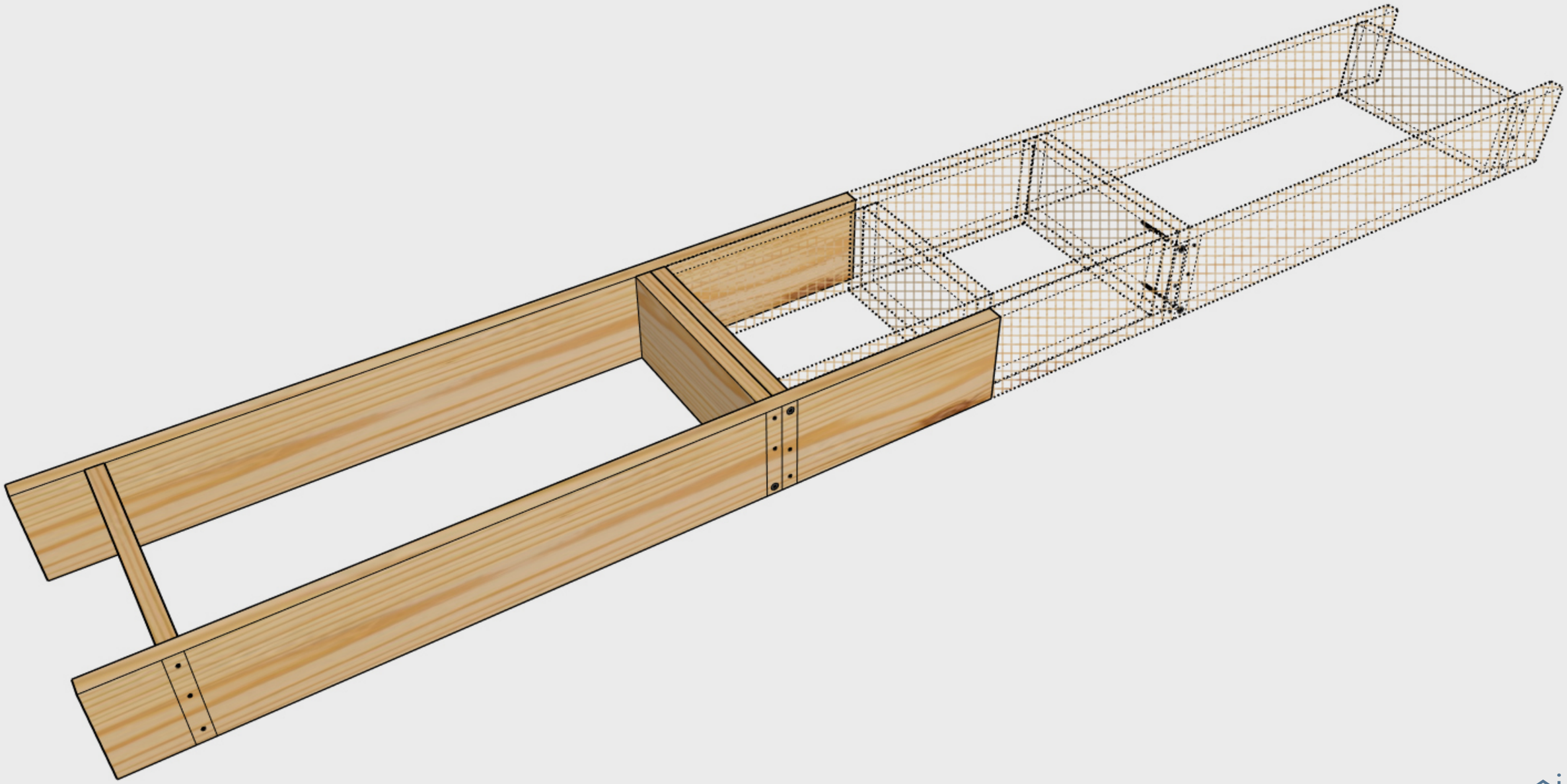

Blank Connector

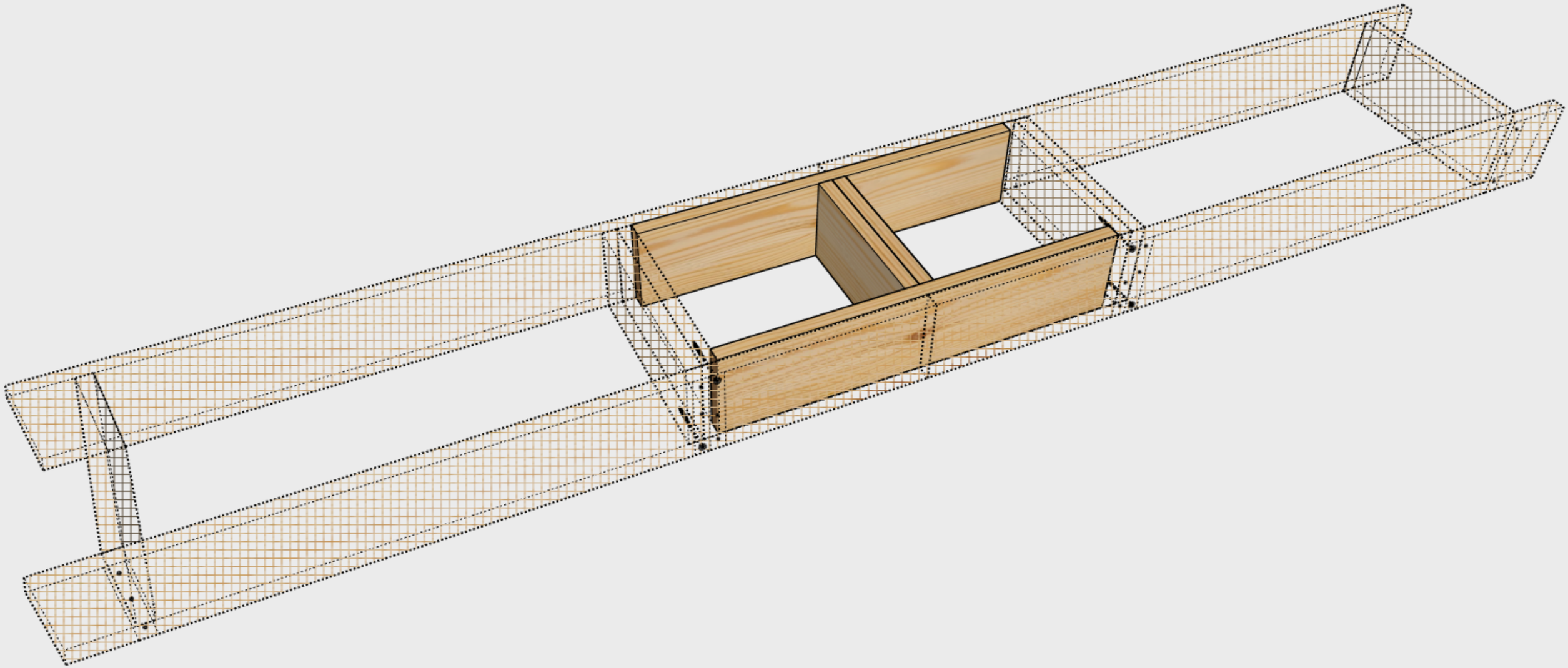

FMxx0606B - Blank Connector - FMxx0606B

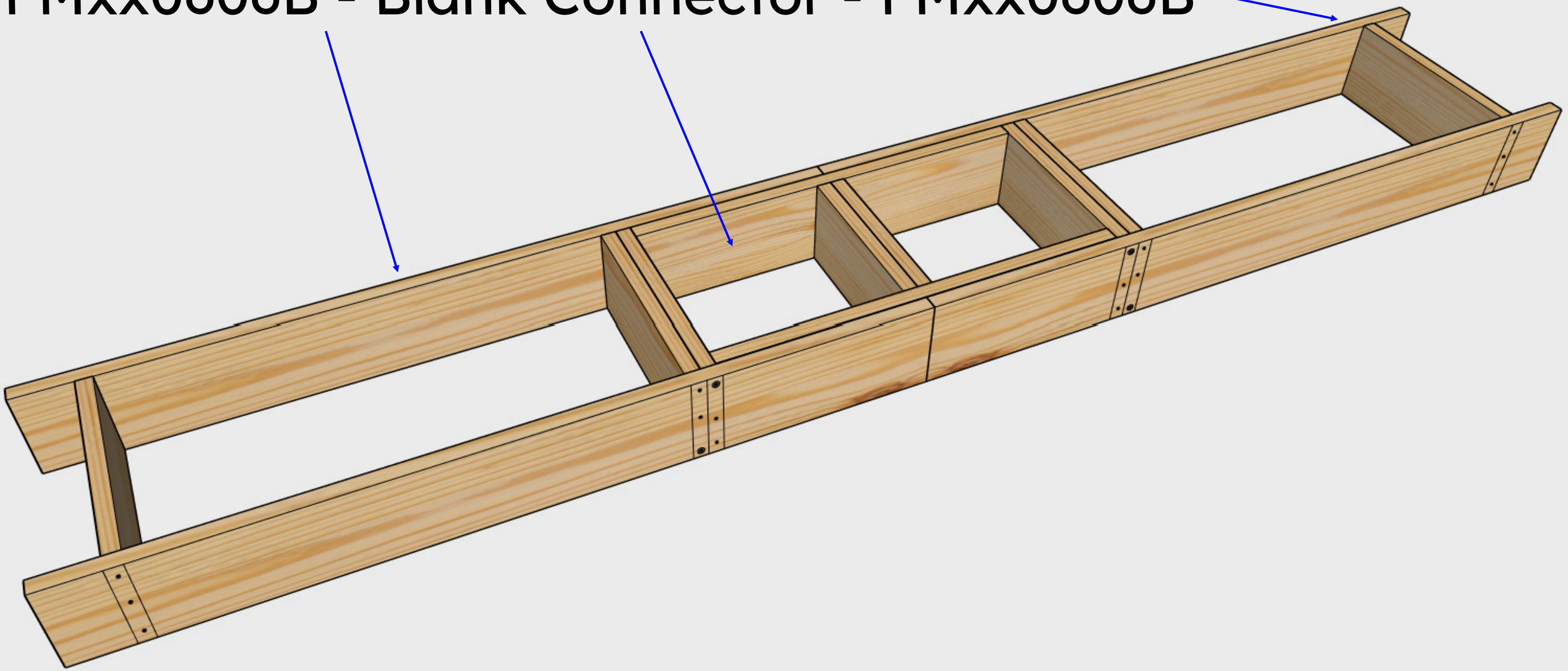

JOIST	SPAN	END 1	END 2	MODULE
2x08	6'	2x6 IFS Wall	Blank	**FM080606B**
2x10	6'	2x6 IFS Wall	Blank	**FM100606B**
2x12	6'	2x6 IFS Wall	Blank	**FM120606B**



PARTS

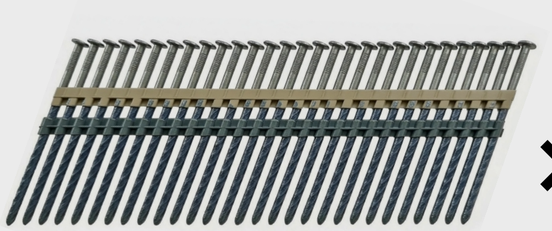

×1

3.25″ × 0.131″ Collated

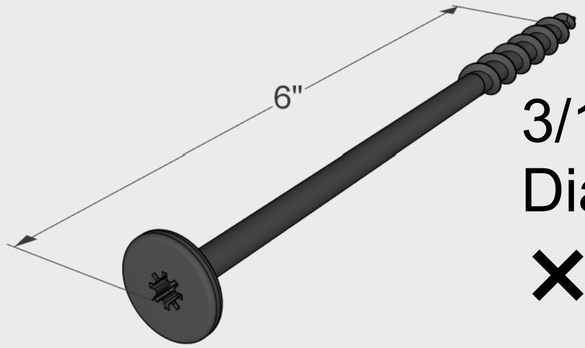

3/16"
Diameter
×4

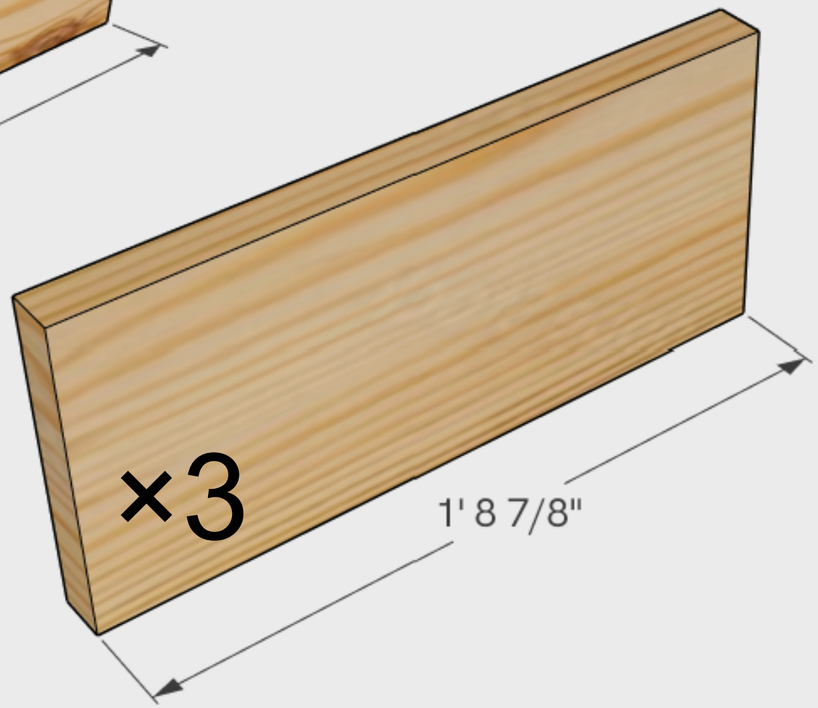





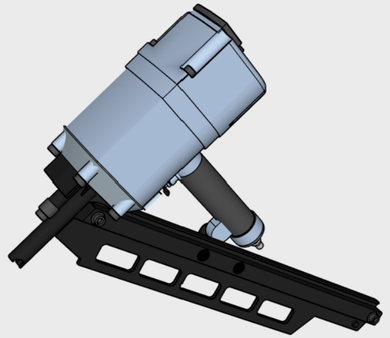

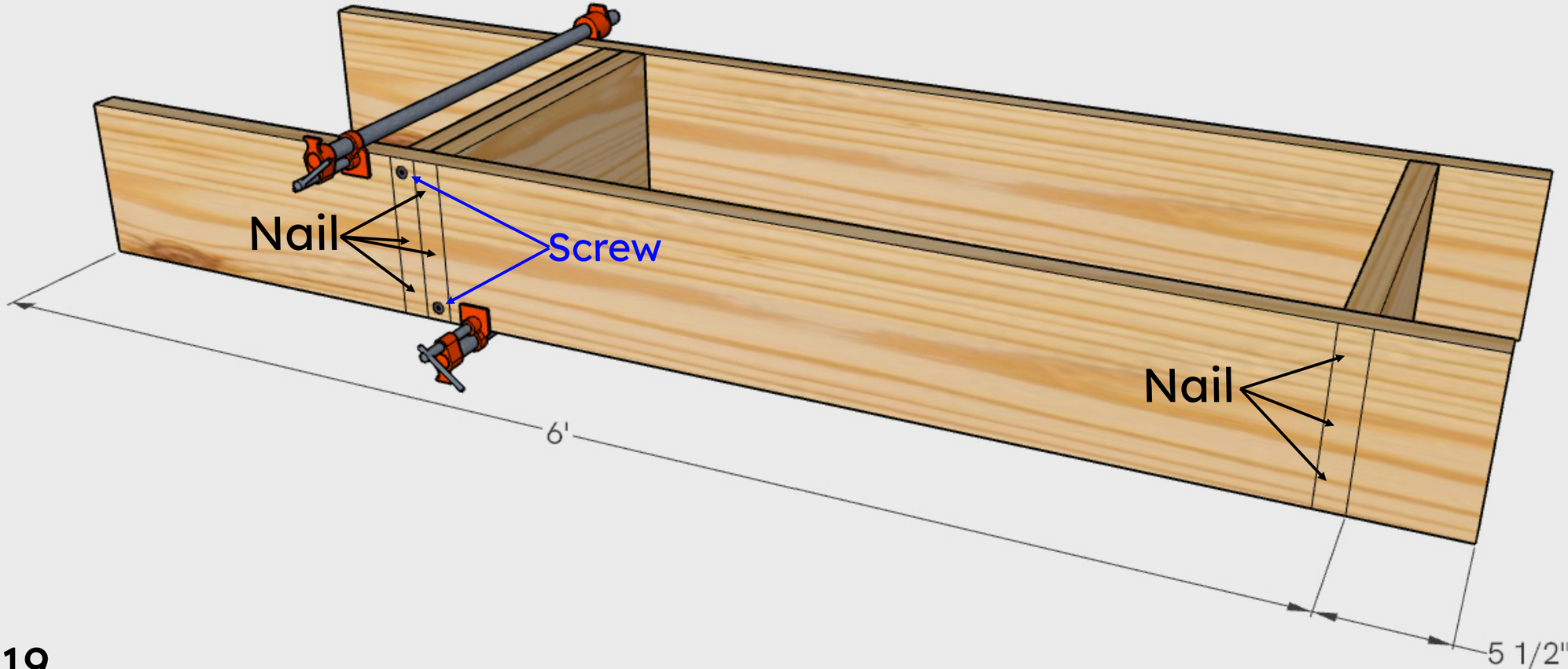
Nail
Screw
Nail
6'
5 1/2"

JOIST	SPAN	END 1	END 2	MODULE
2x08	6'	2x6 IFS Wall	2x6 IFS Wall	**FM08060606**
2x10	6'	2x6 IFS Wall	2x6 IFS Wall	**FM10060606**
2x12	6'	2x6 IFS Wall	2x6 IFS Wall	**FM12060606**

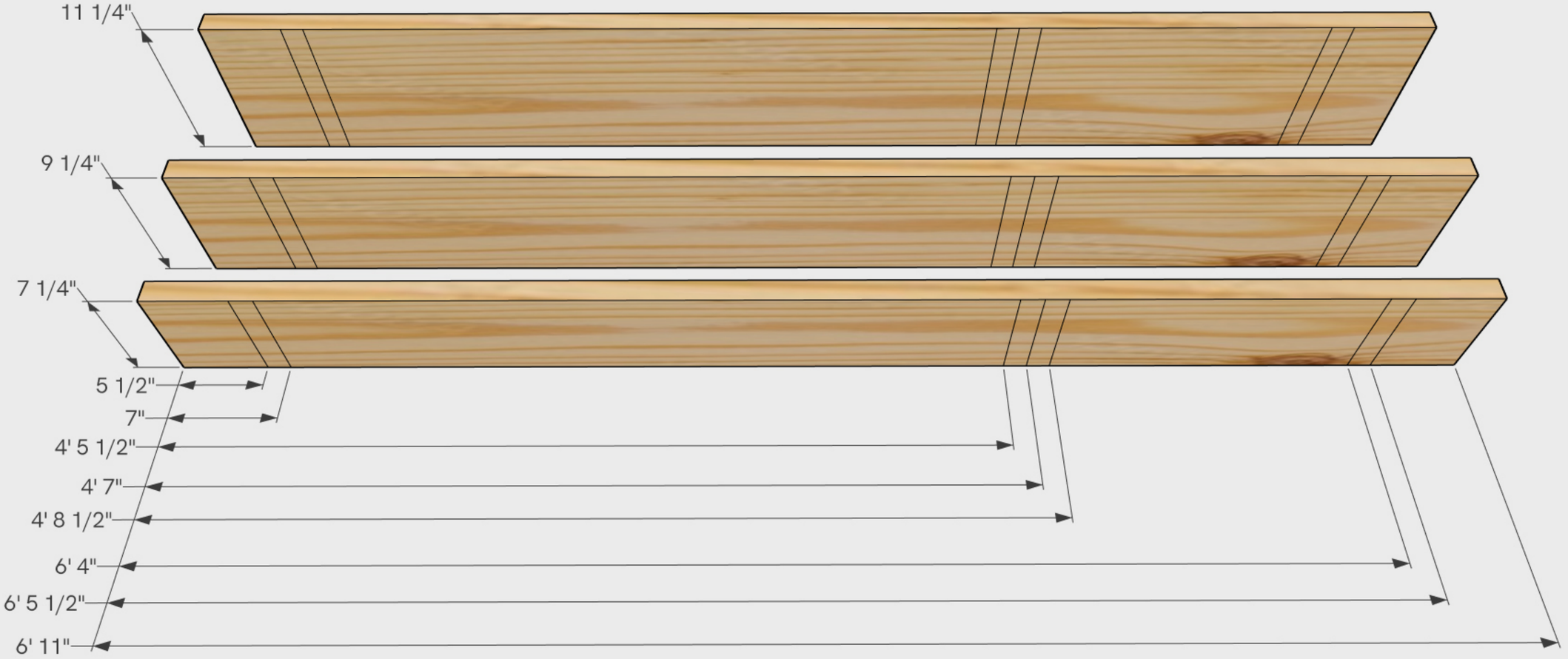

FMxx060606

PARTS

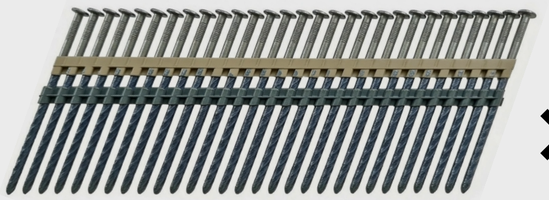

×1

3.25″ × 0.131″ Collated

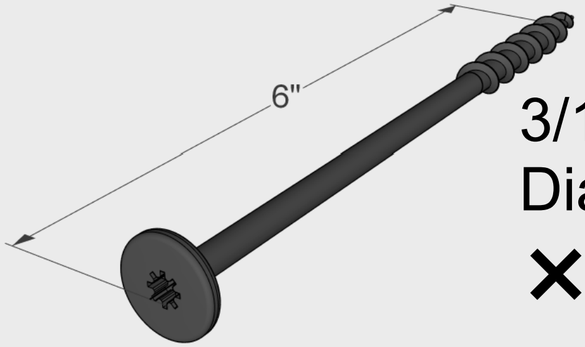

3/16"
Diameter
×4

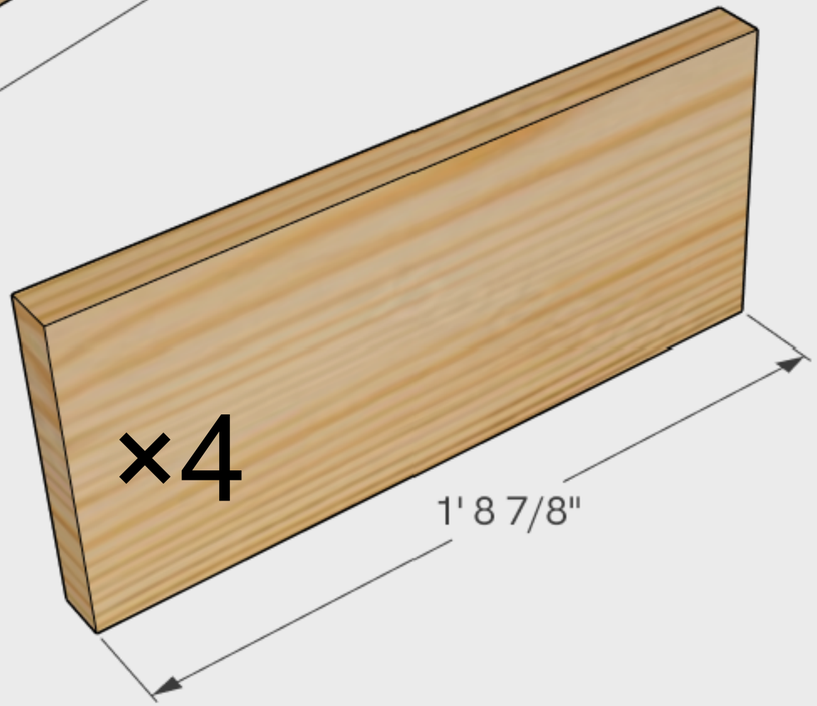

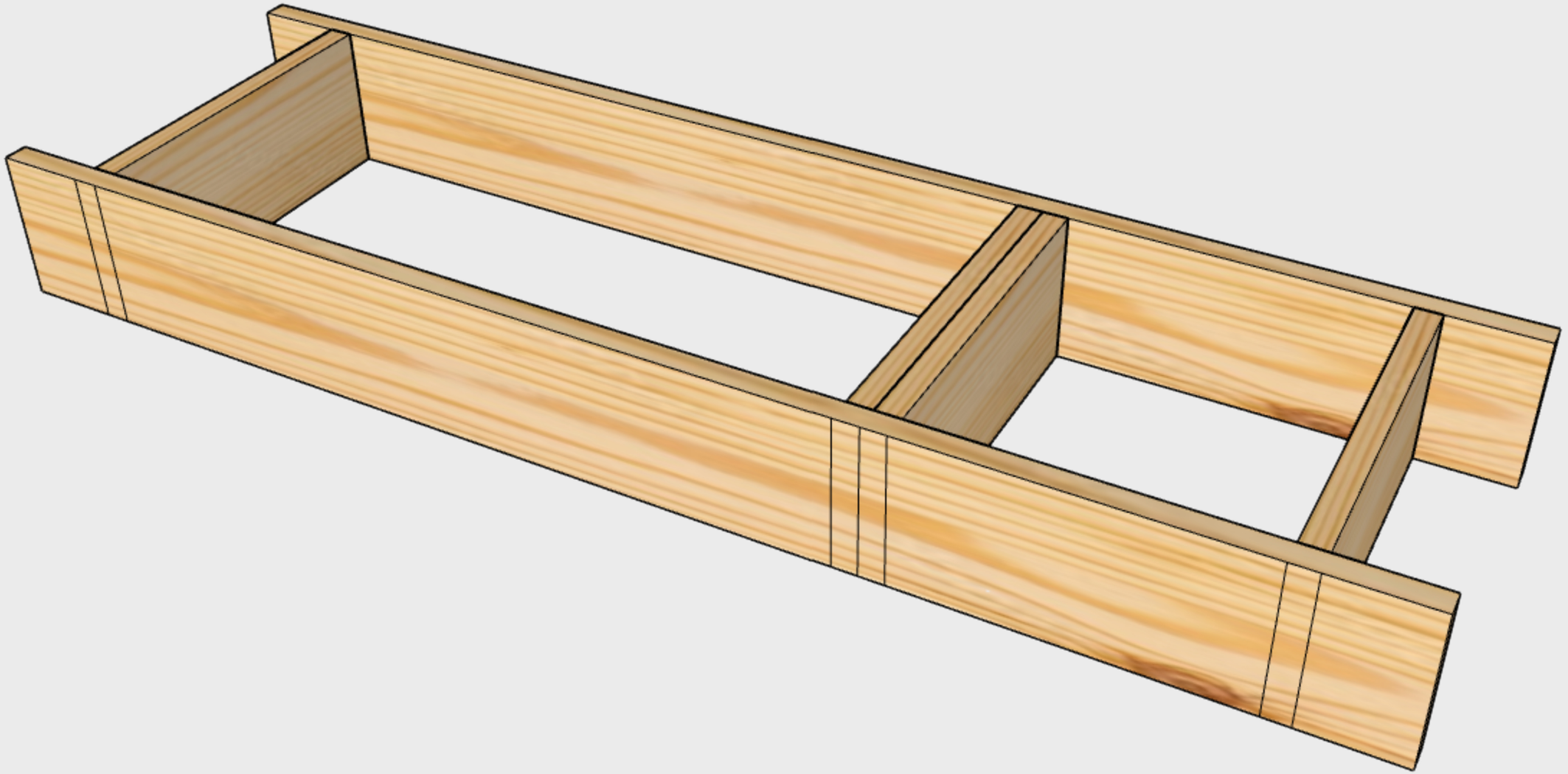

JOIST	SPAN	END 1	END 2	MODULE
2x08	8'	2x6 IFS Wall	Blank	**FM080806B**
2x10	8'	2x6 IFS Wall	Blank	**FM100806B**
2x12	8'	2x6 IFS Wall	Blank	**FM120806B**

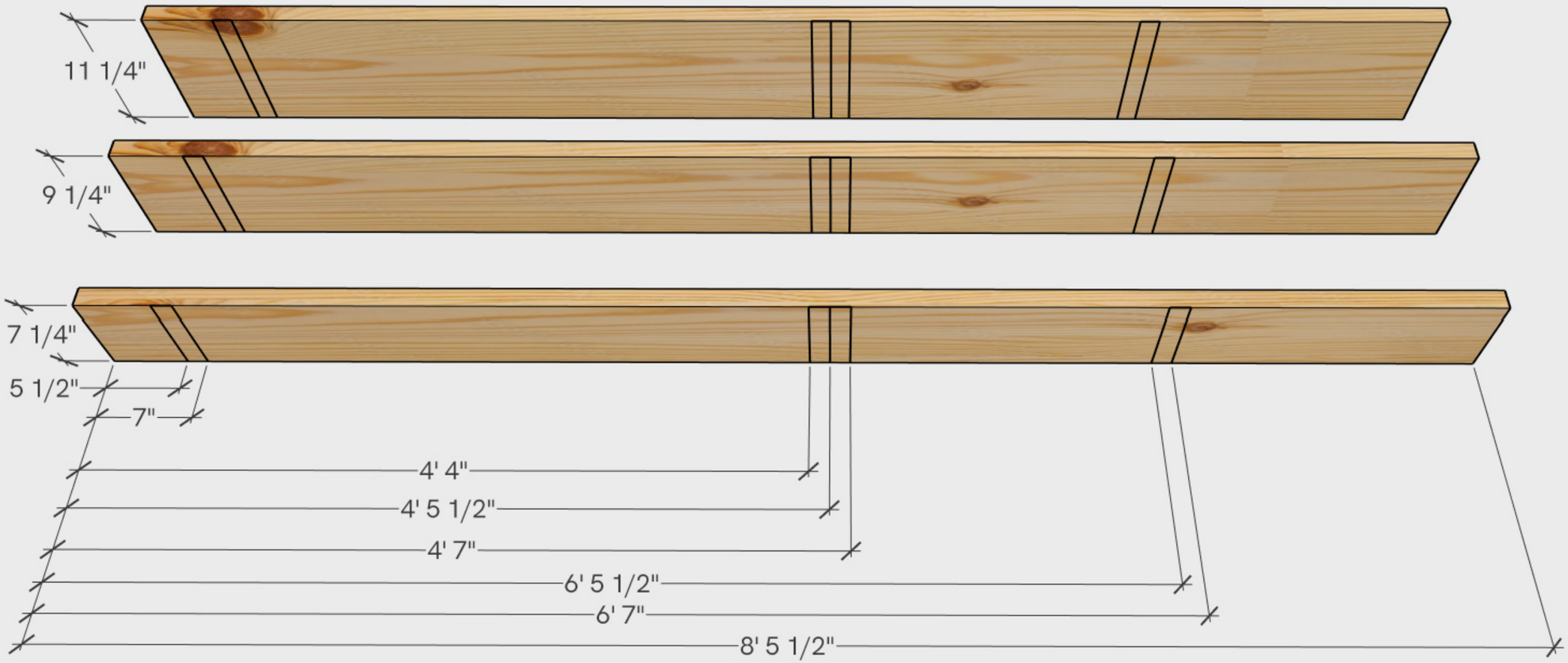

FMxx0806B

PARTS

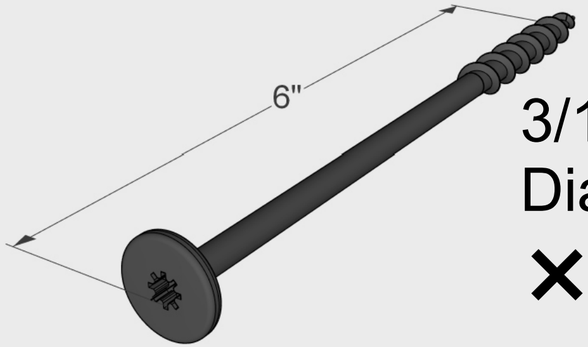

3/16"
Diameter
×4

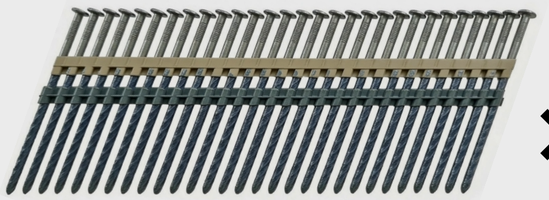

×1

3.25" × 0.131" Collated

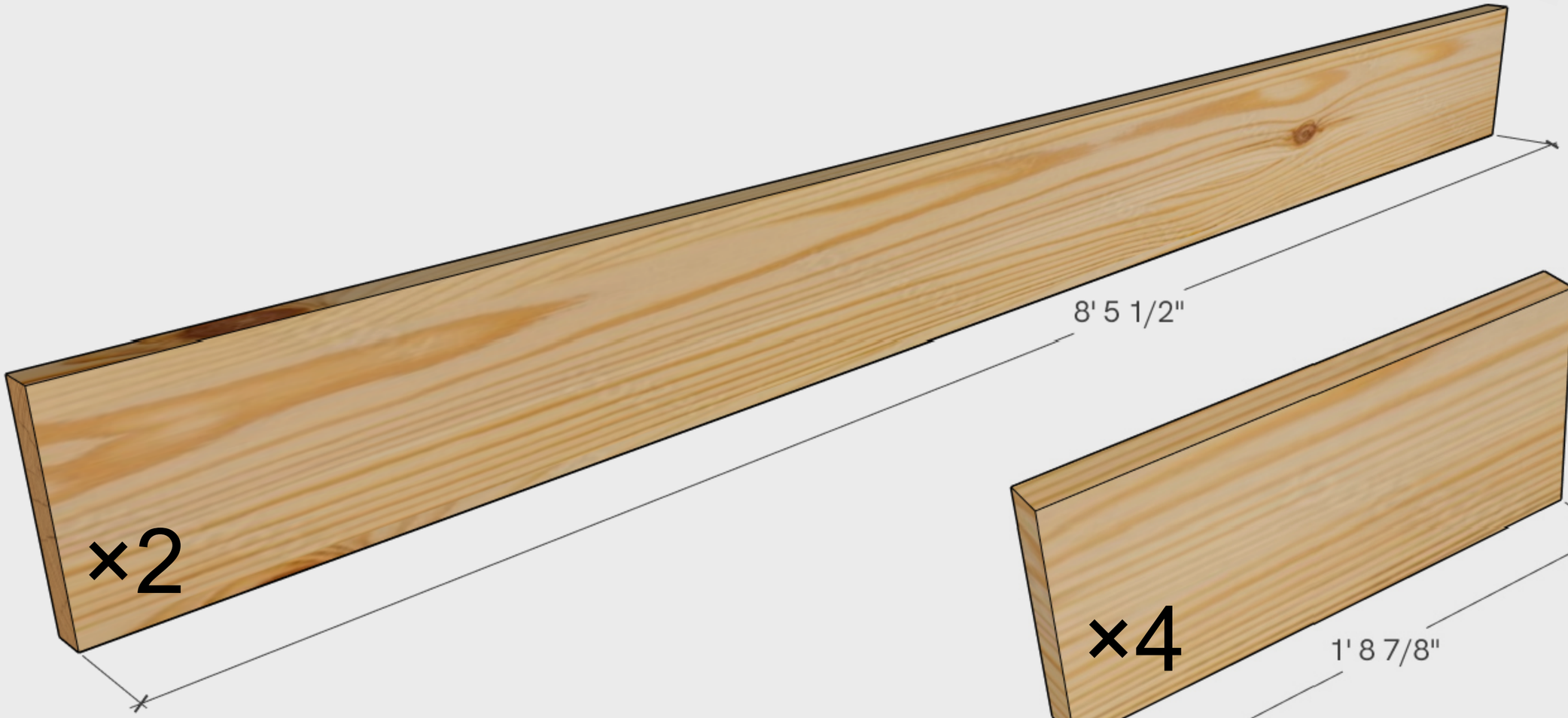

imagine cabins

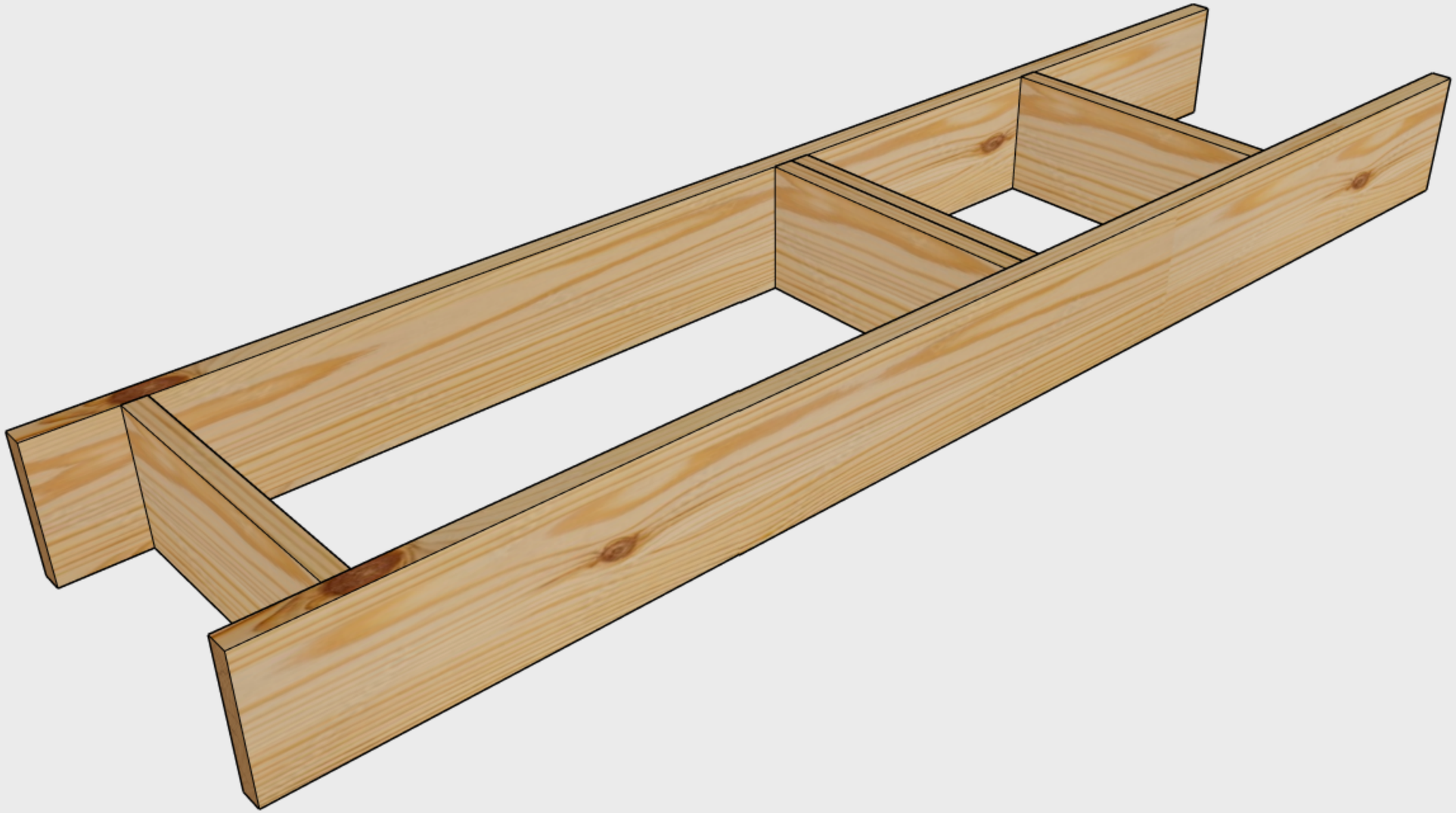

JOIST	SPAN	END 1	END 2	MODULE
2x08	8'	2x6 IFS Wall	2x6 IFS Wall	**FM08080606**
2x10	8'	2x6 IFS Wall	2x6 IFS Wall	**FM10080606**
2x12	8'	2x6 IFS Wall	2x6 IFS Wall	**FM12080606**

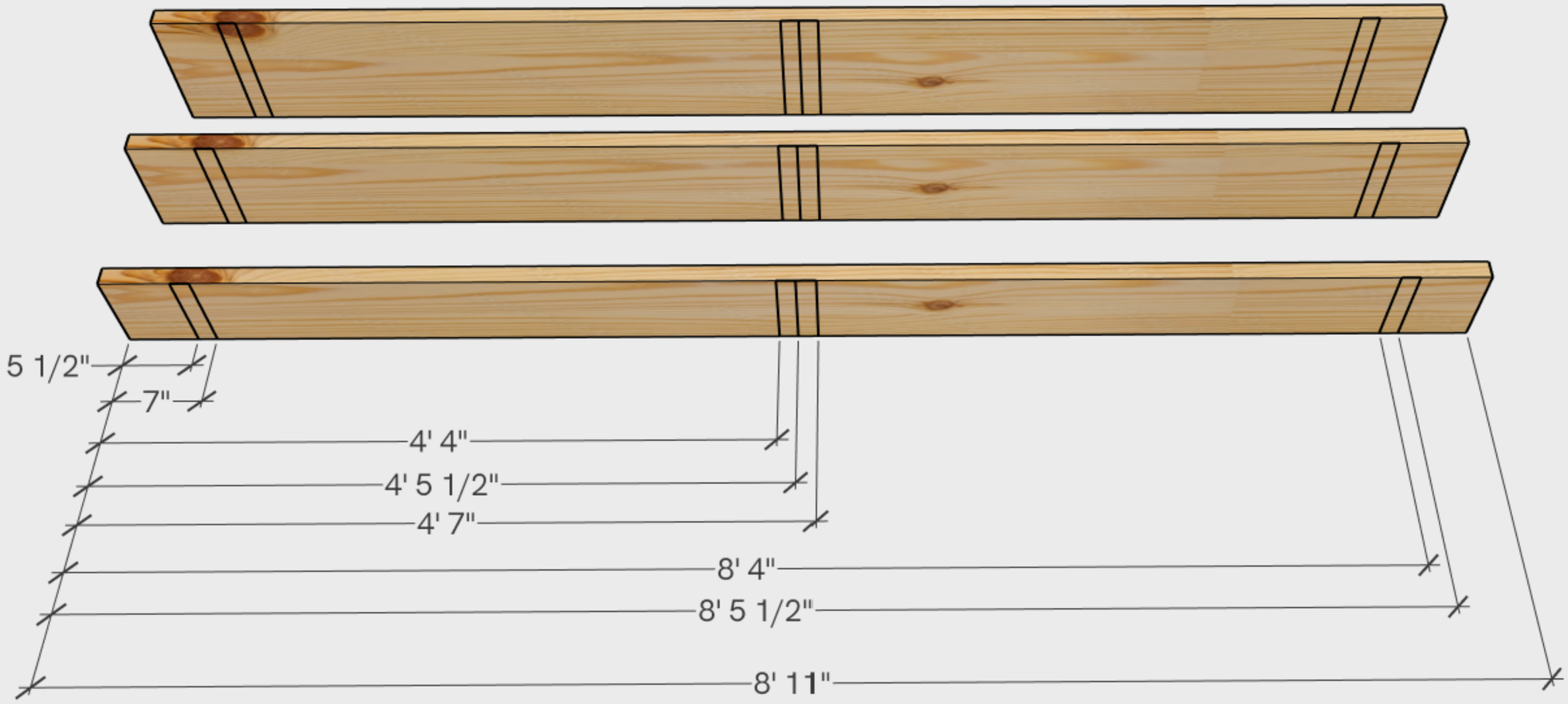

FMxx080606

PARTS

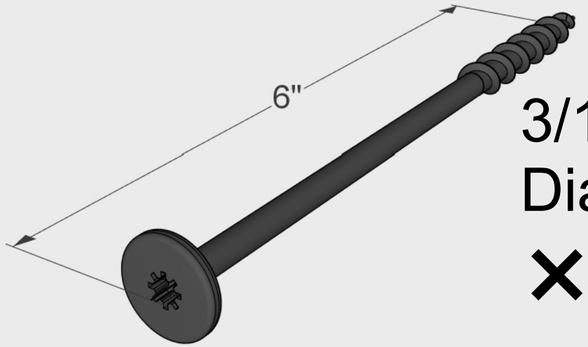

3/16"
Diameter
×4

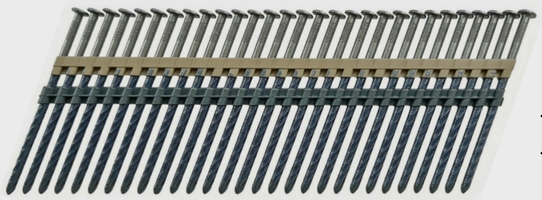

×1

3.25" × 0.131" Collated

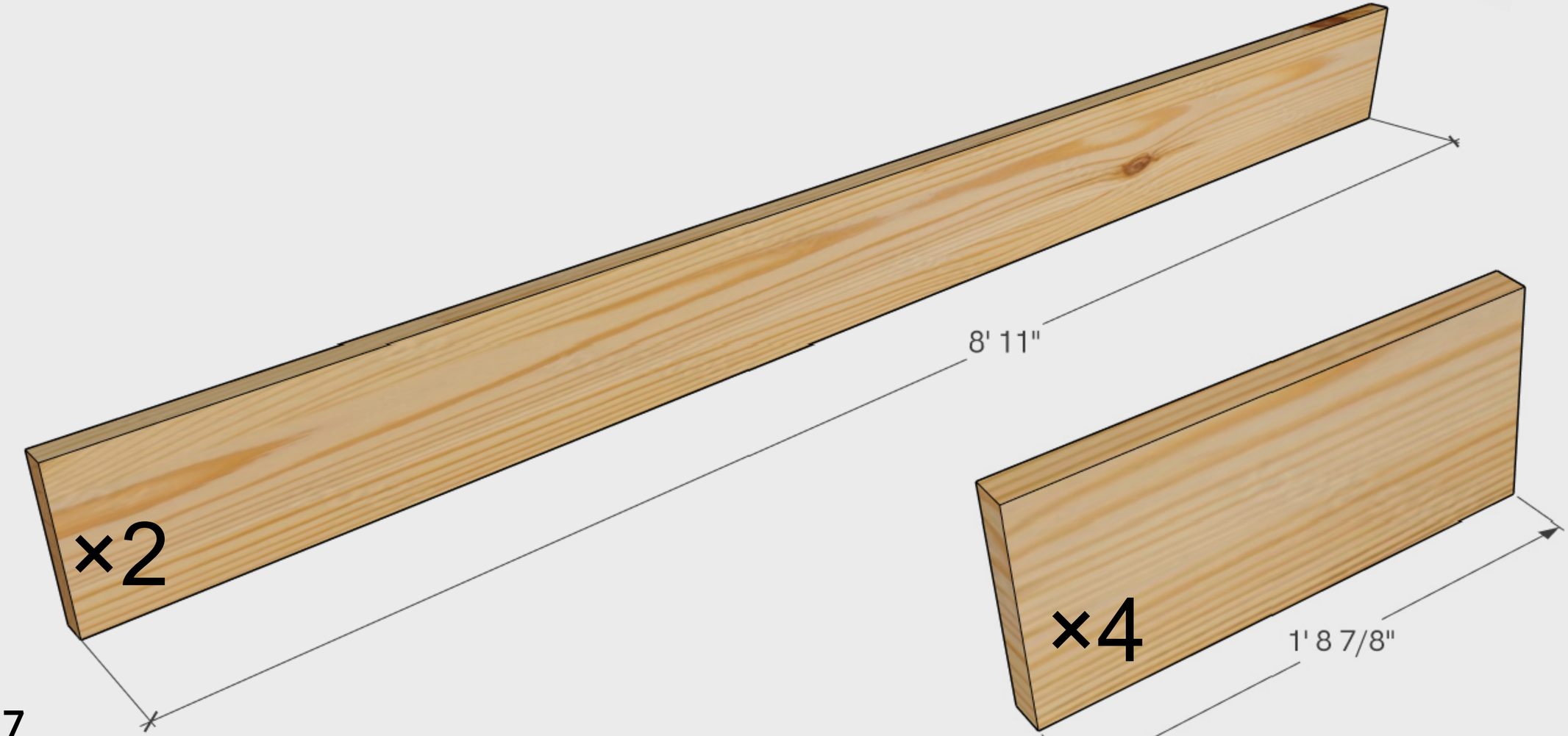

imagine cabins

FMxx080606

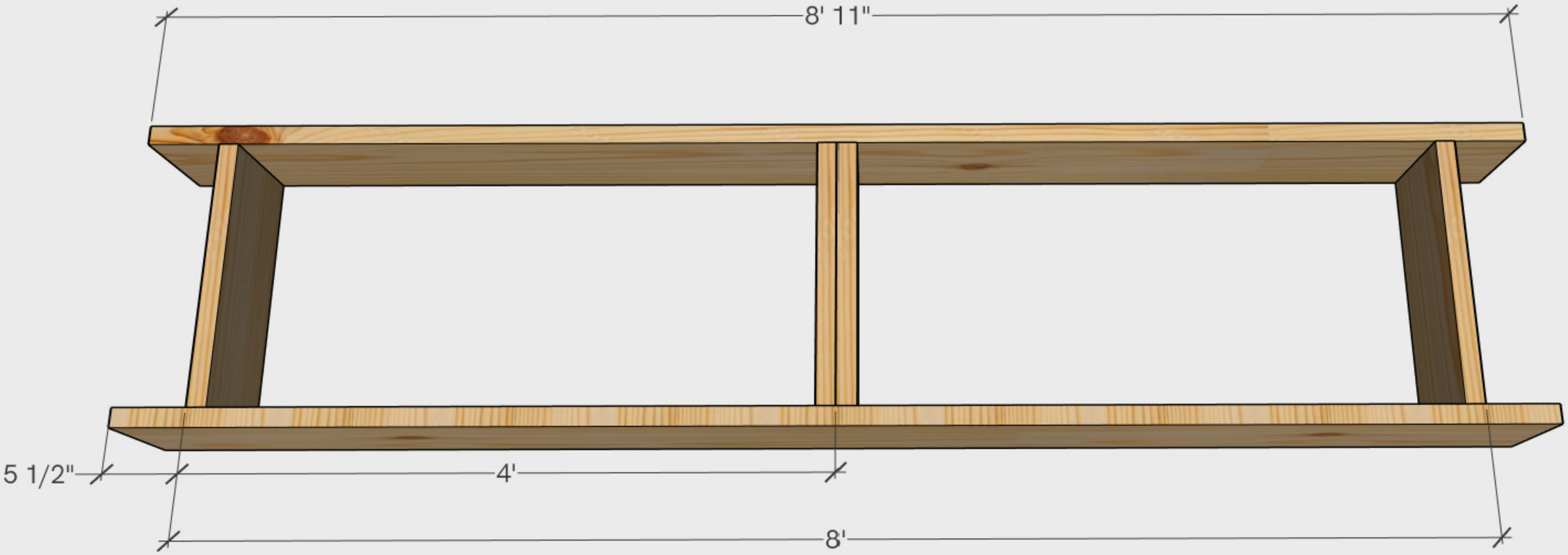

JOIST	SPAN	END 1	END 2	MODULE
2x08	10'	2x6 IFS Wall	Blank	**FM081006B**
2x10	10'	2x6 IFS Wall	Blank	**FM101006B**
2x12	10'	2x6 IFS Wall	Blank	**FM121006B**

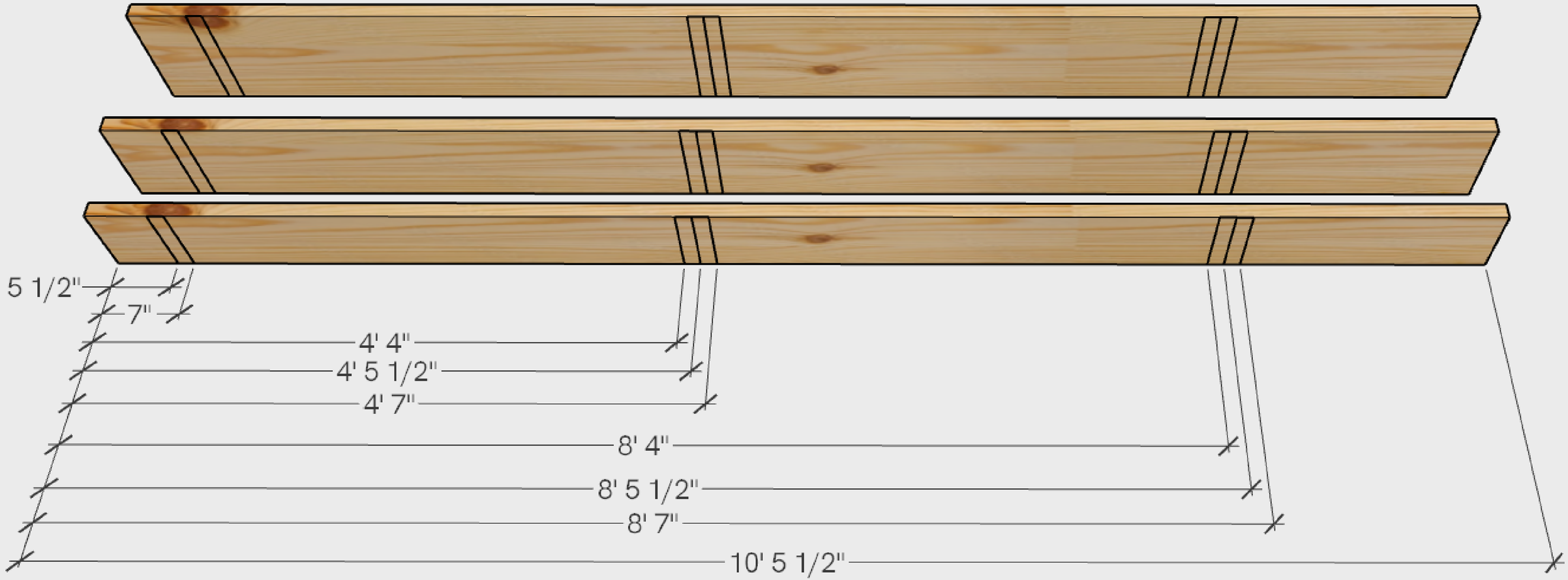

FMxx1006B

PARTS

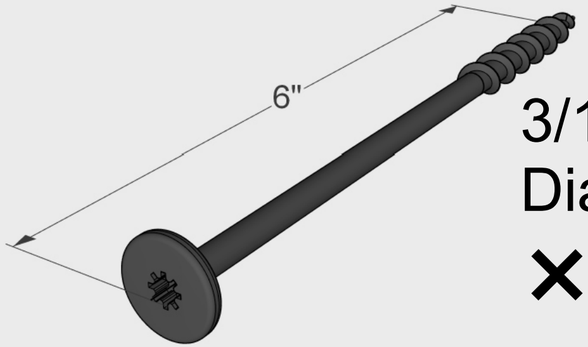

3/16"
Diameter
×8

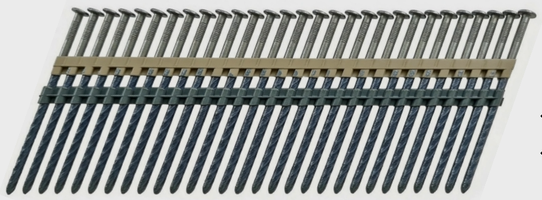

×1

3.25" × 0.131" Collated

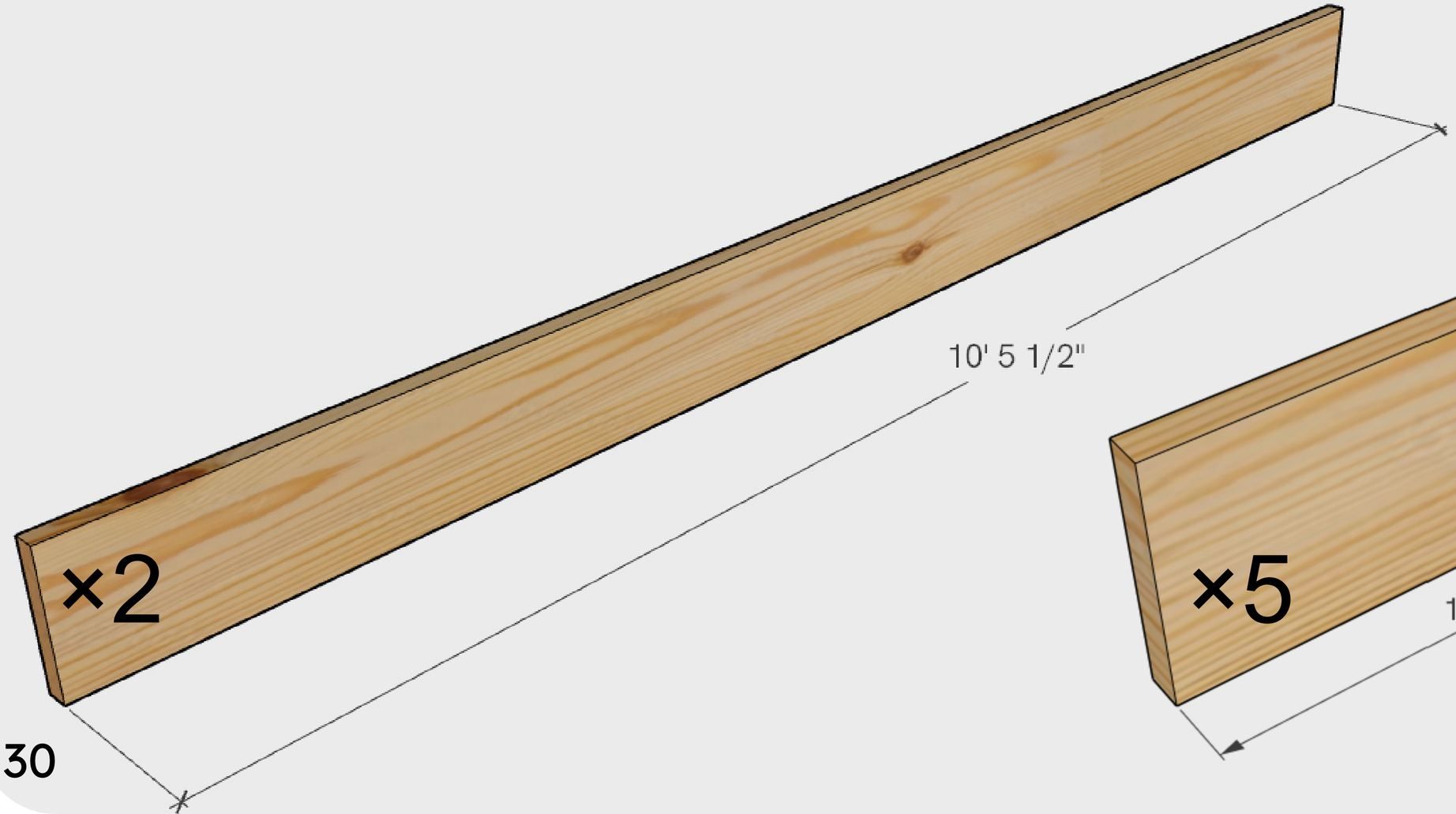

×2

×5

imagine cabins

FMxx1006B

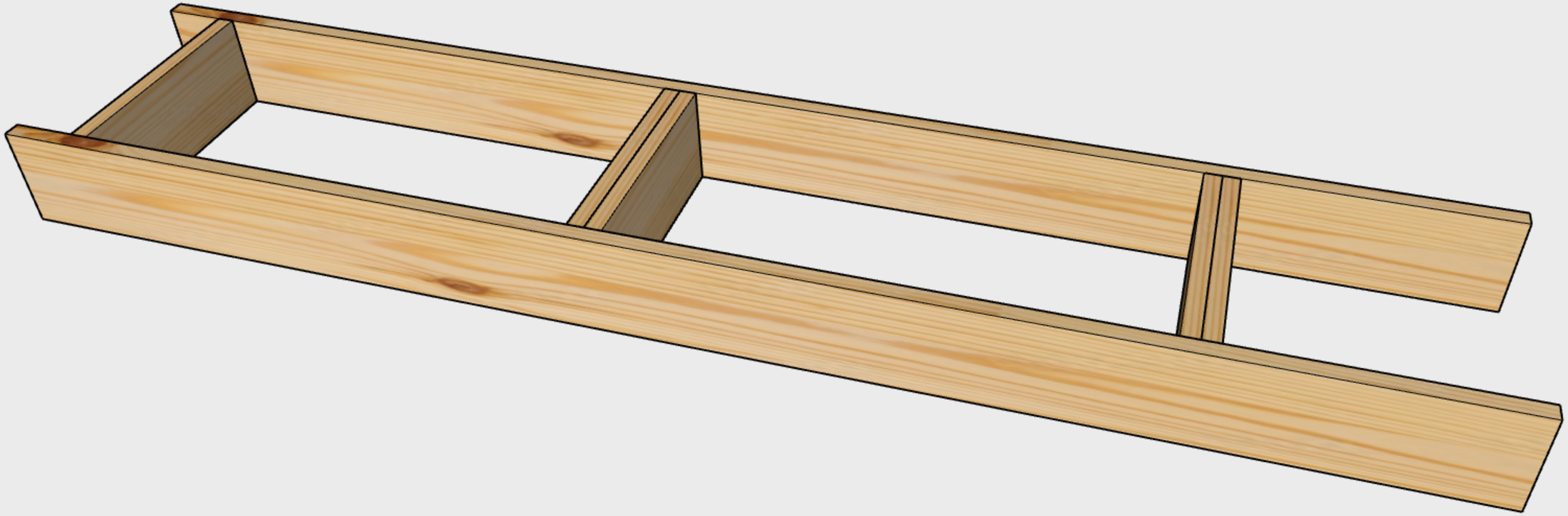

JOIST	SPAN	END 1	END 2	MODULE
2x08	10'	2x6 IFS Wall	2x6 IFS Wall	**FM08100606**
2x10	10'	2x6 IFS Wall	2x6 IFS Wall	**FM10100606**
2x12	10'	2x6 IFS Wall	2x6 IFS Wall	**FM12100606**

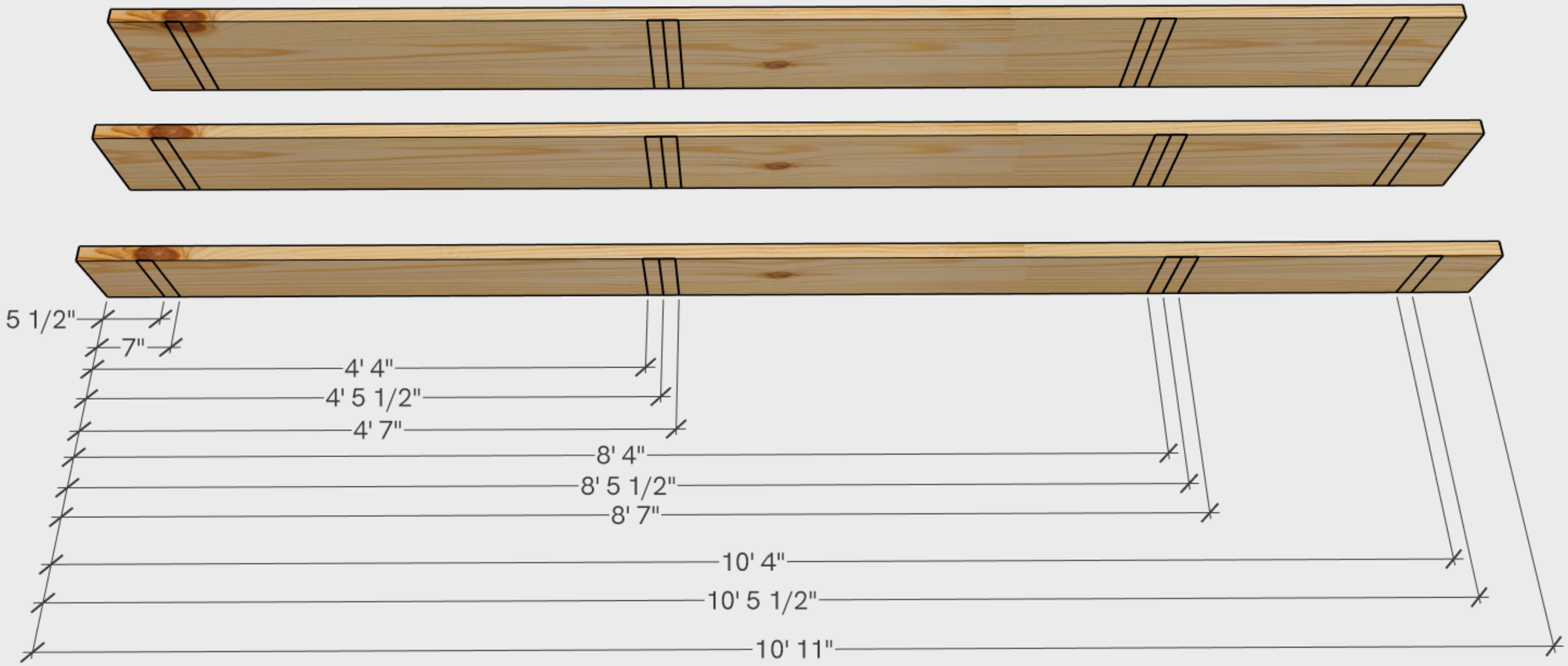

FMxx100606

PARTS

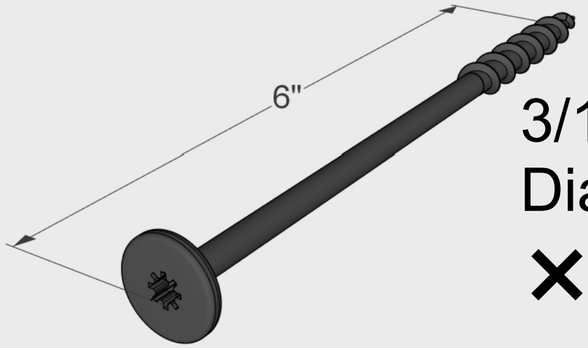

3/16"
Diameter
×8

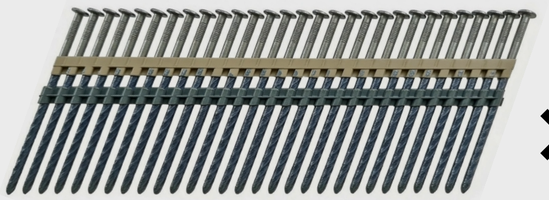

×1

3.25" × 0.131" Collated

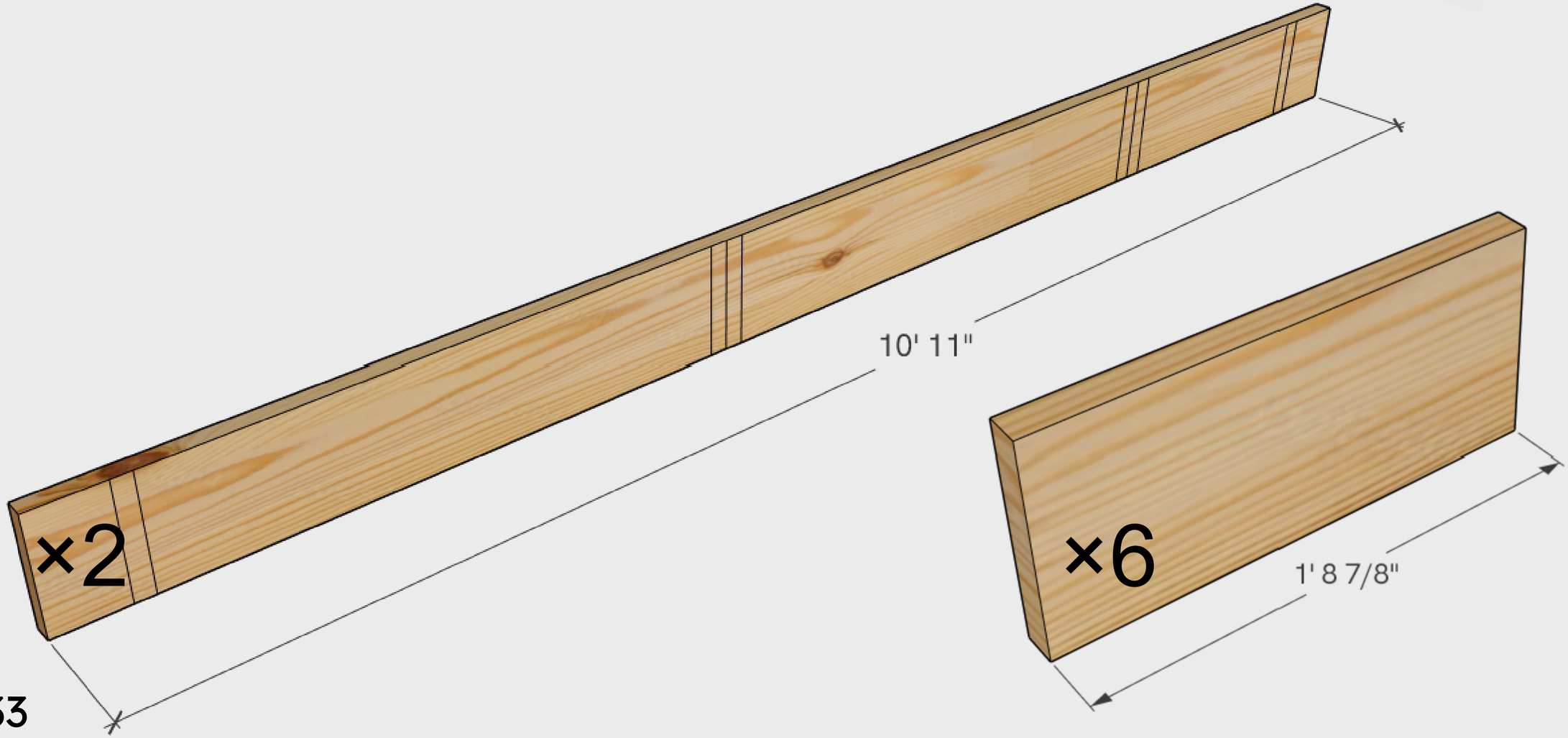

imagine cabins

FMxx100606

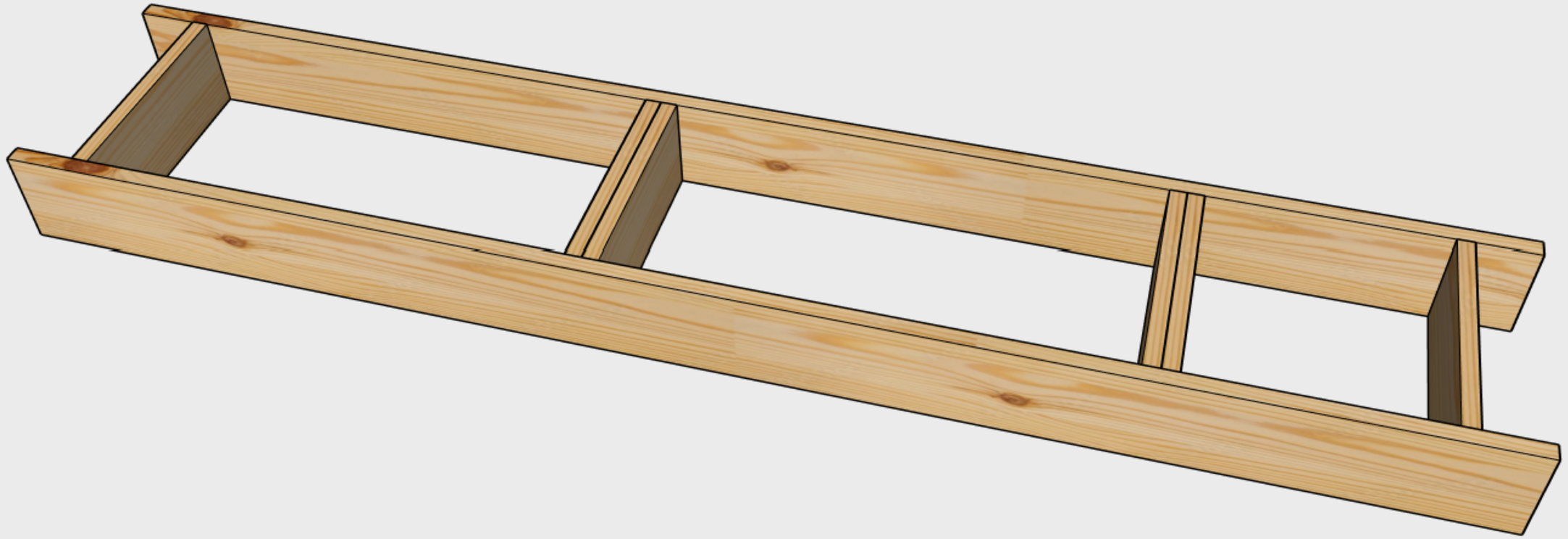

JOIST	SPAN	END 1	END 2	MODULE
2x10	12'	2x6 IFS Wall	Blank	**FM101206B**
2x12	12'	2x6 IFS Wall	Blank	**FM121206B**

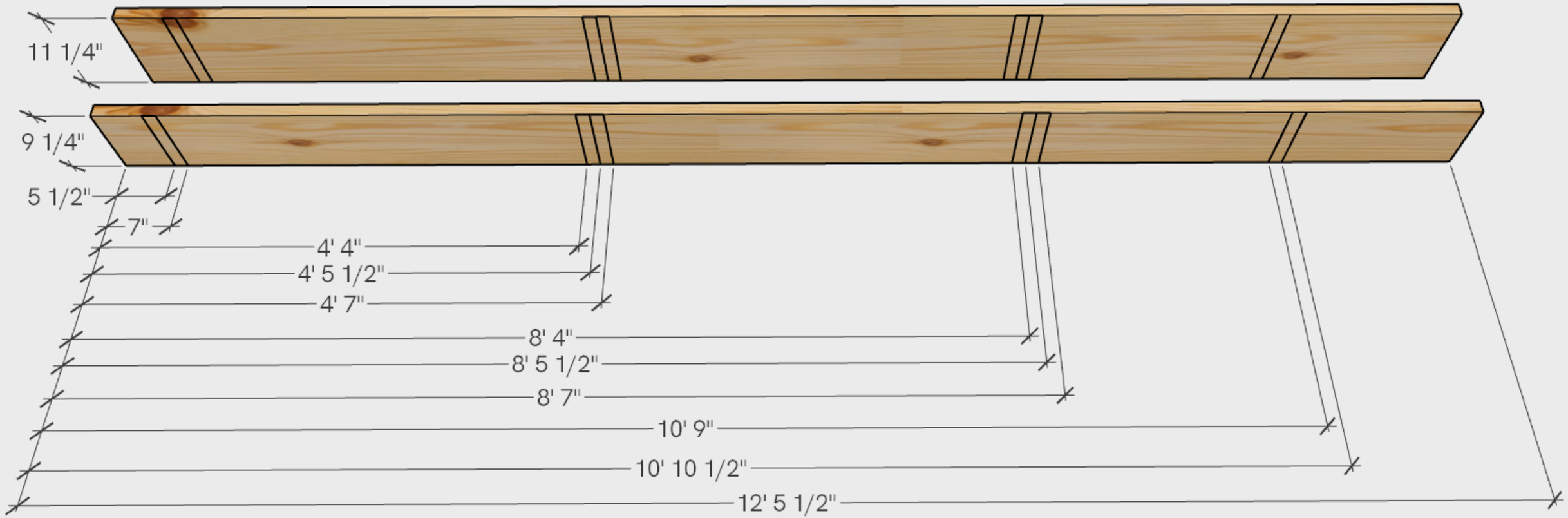

FMxx1206B

PARTS

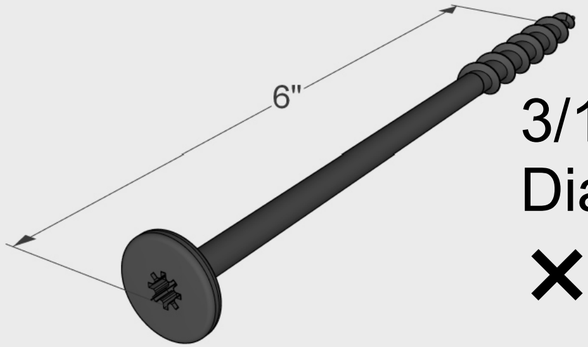

3/16"
Diameter
×8

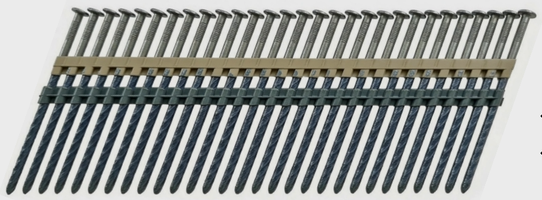

×1

3.25" × 0.131" Collated

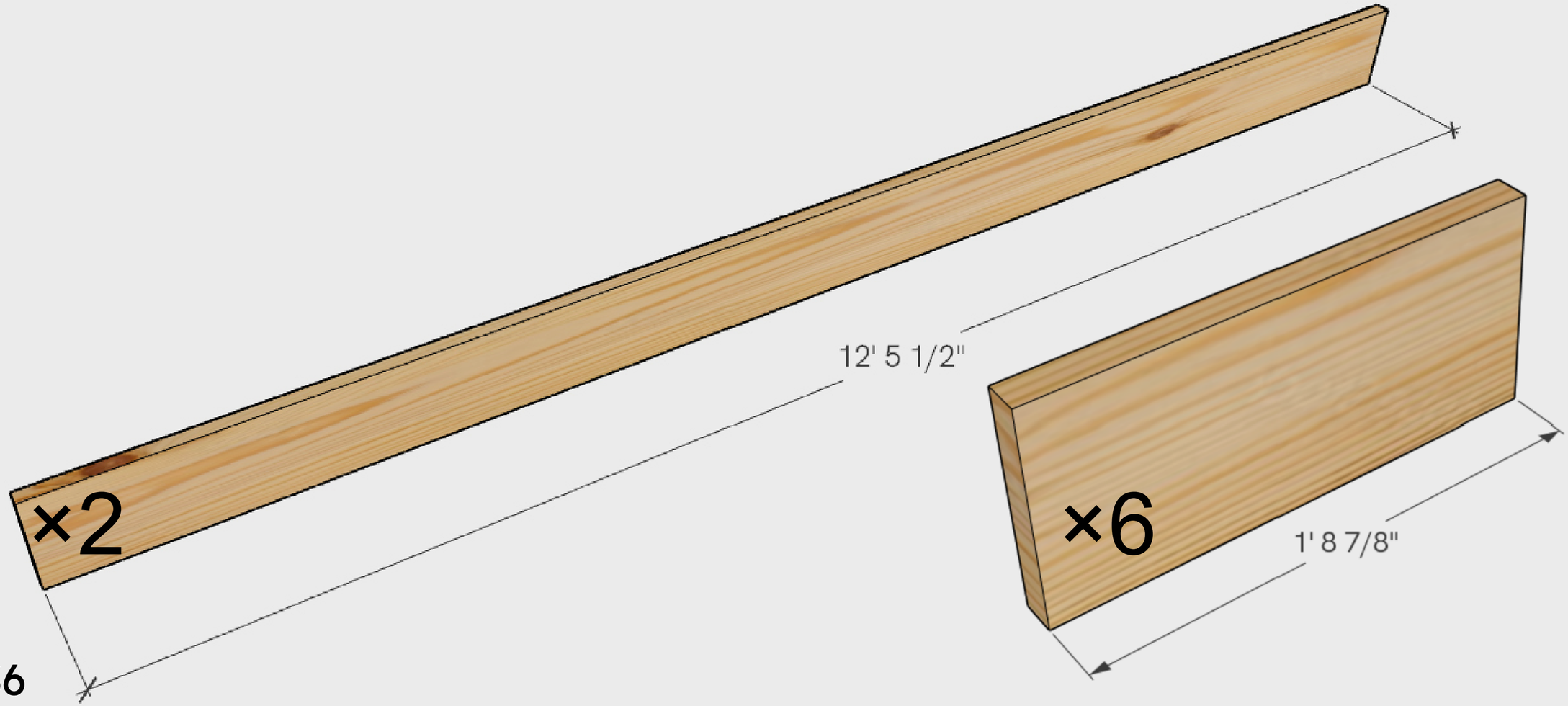

imagine cabins

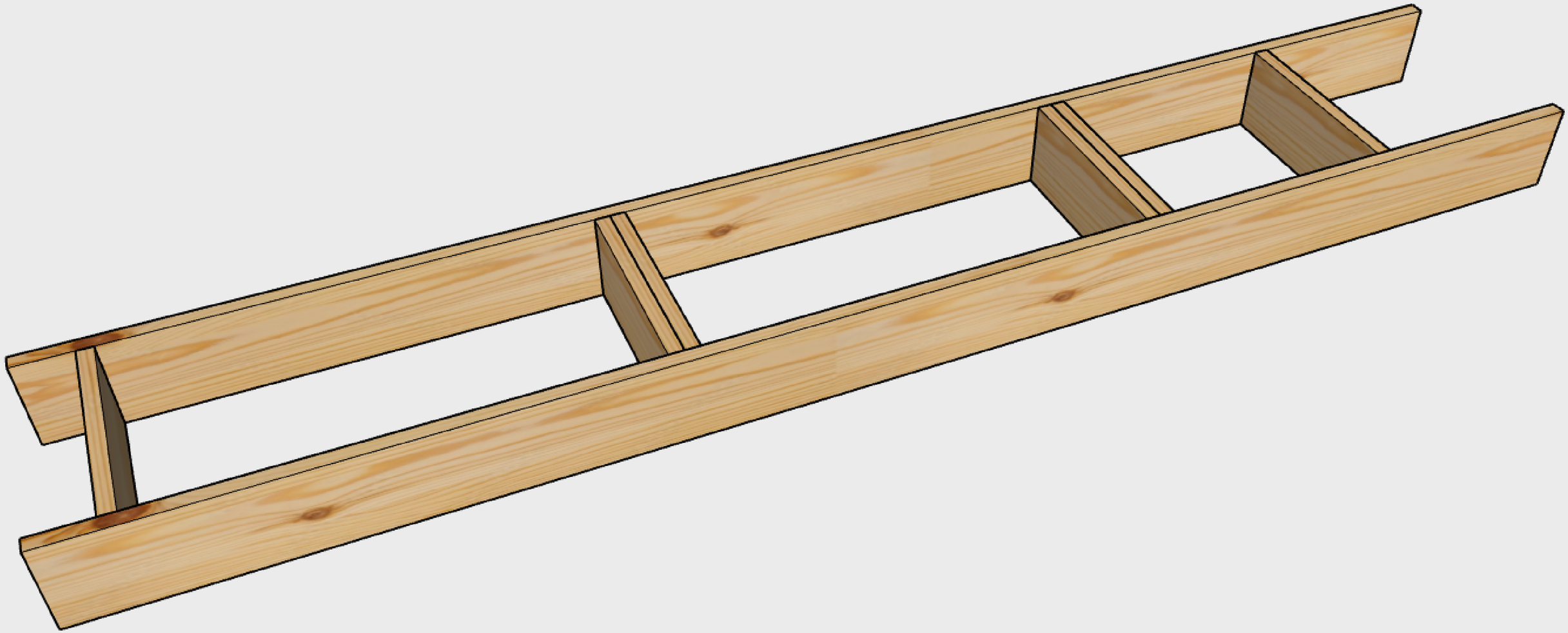

JOIST	SPAN	END 1	END 2	MODULE
2x10	12'	2x6 IFS Wall	2x6 IFS Wall	**FM10120606**
2x12	12'	2x6 IFS Wall	2x6 IFS Wall	**FM12120606**

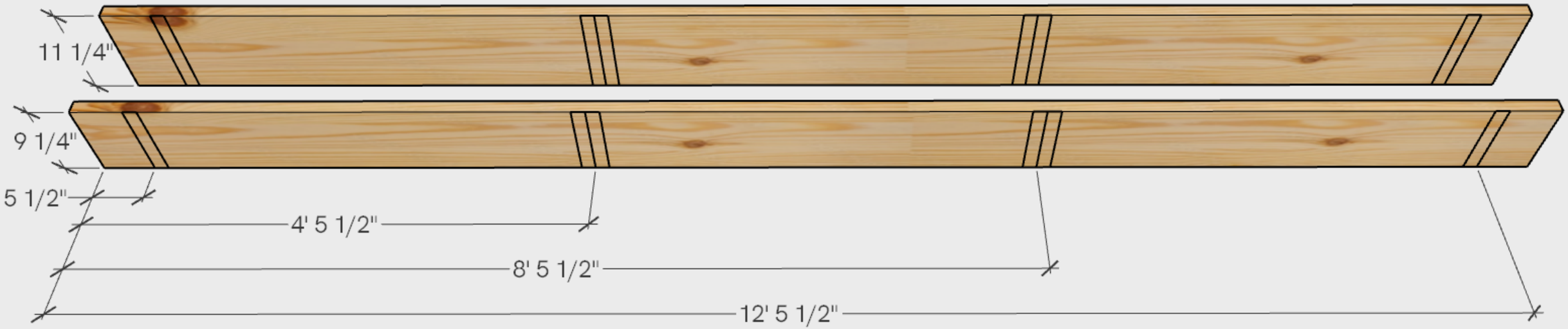

FMxx120606

PARTS

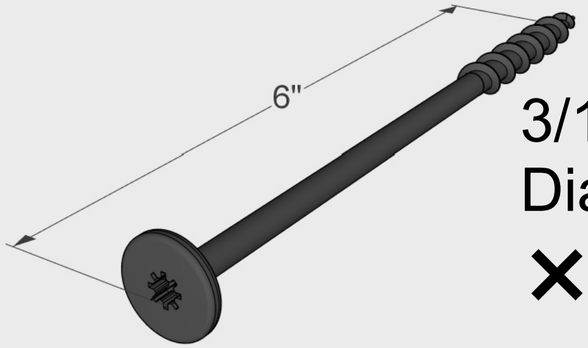

3/16"
Diameter
×8

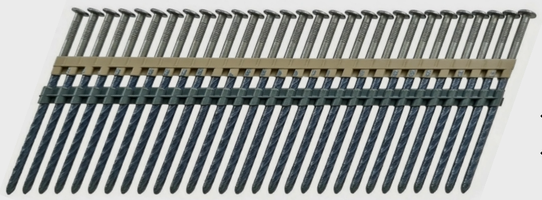

×1

3.25" × 0.131" Collated

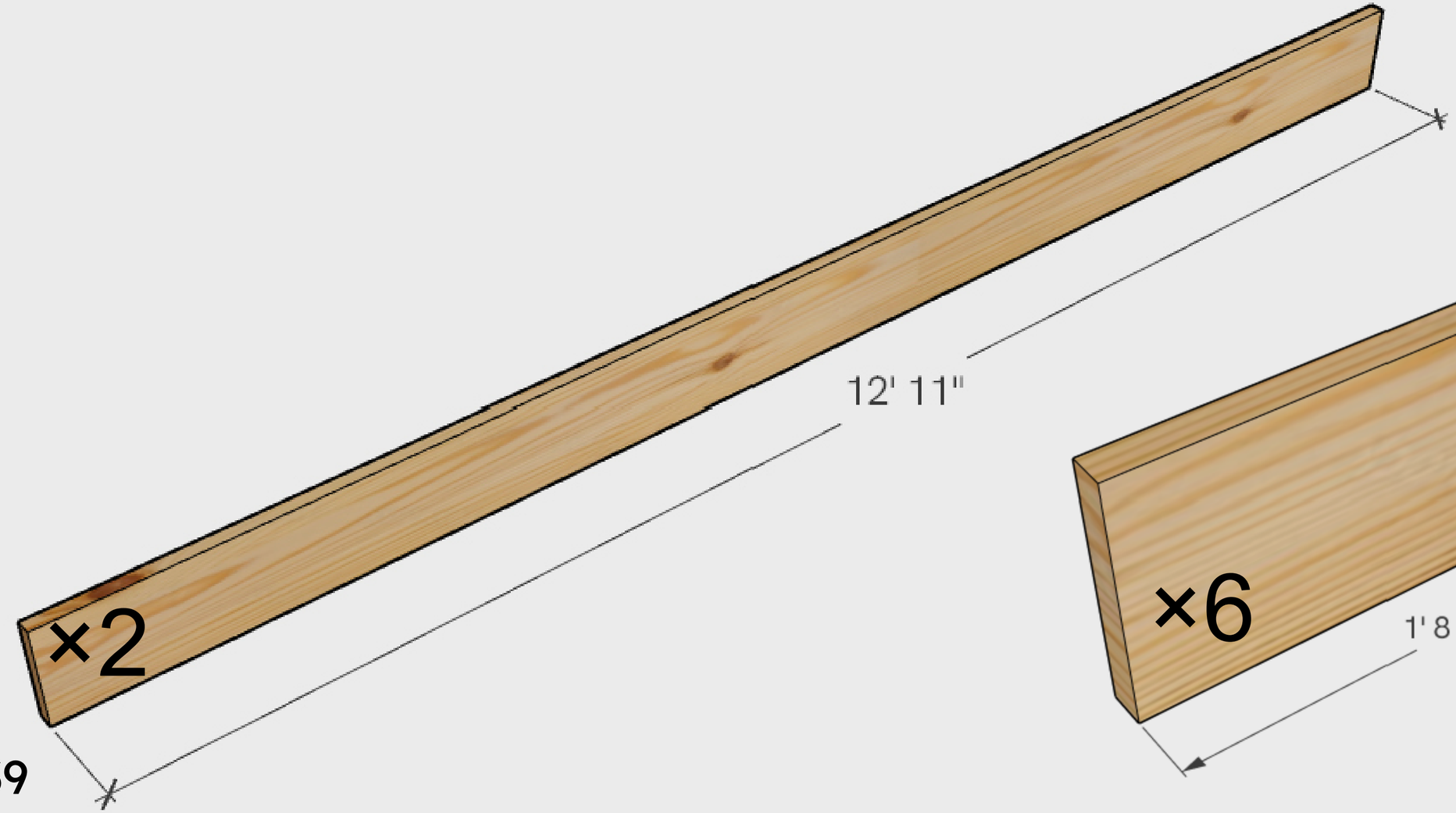

imagine cabins

FMxx120606

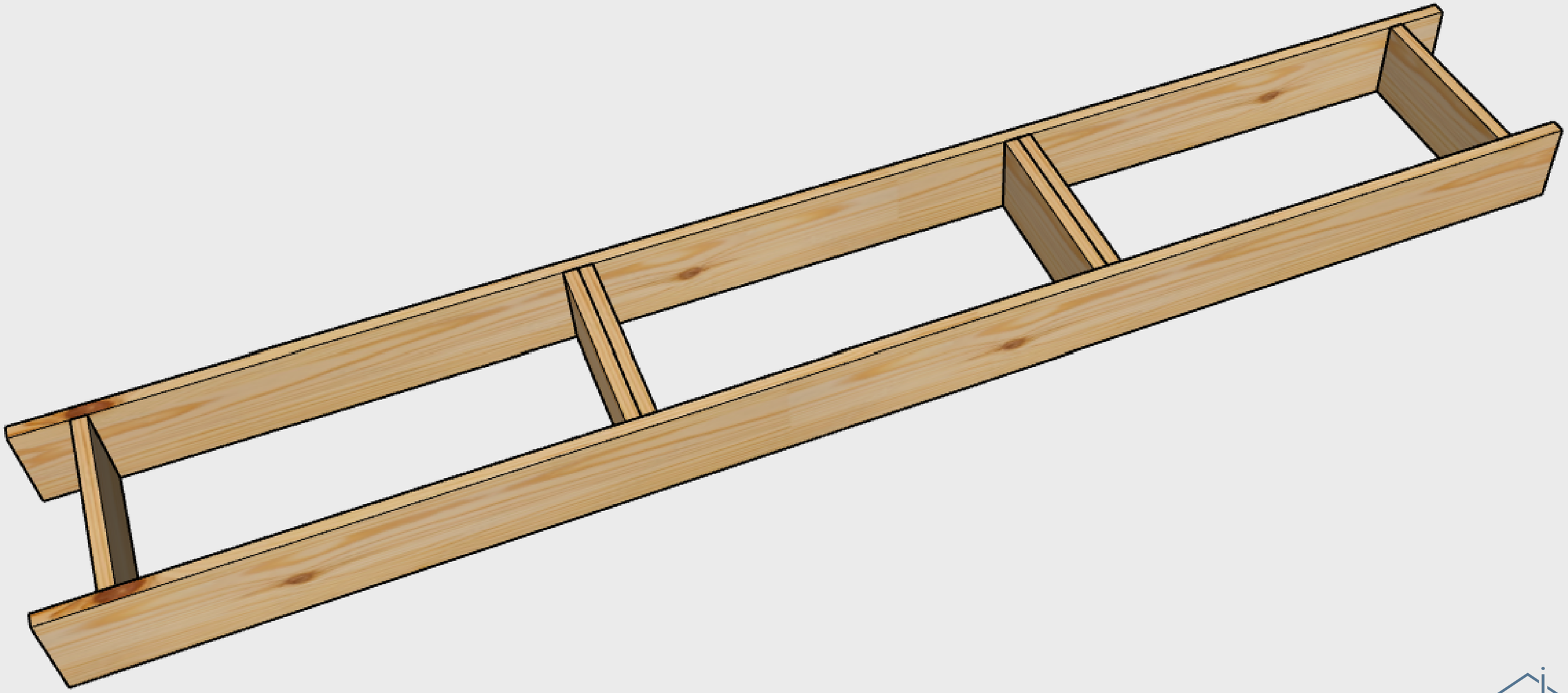

JOIST	SPAN	END 1	END 2	MODULE
2x12	14'	2x6 IFS Wall	Blank	**FM121406B**

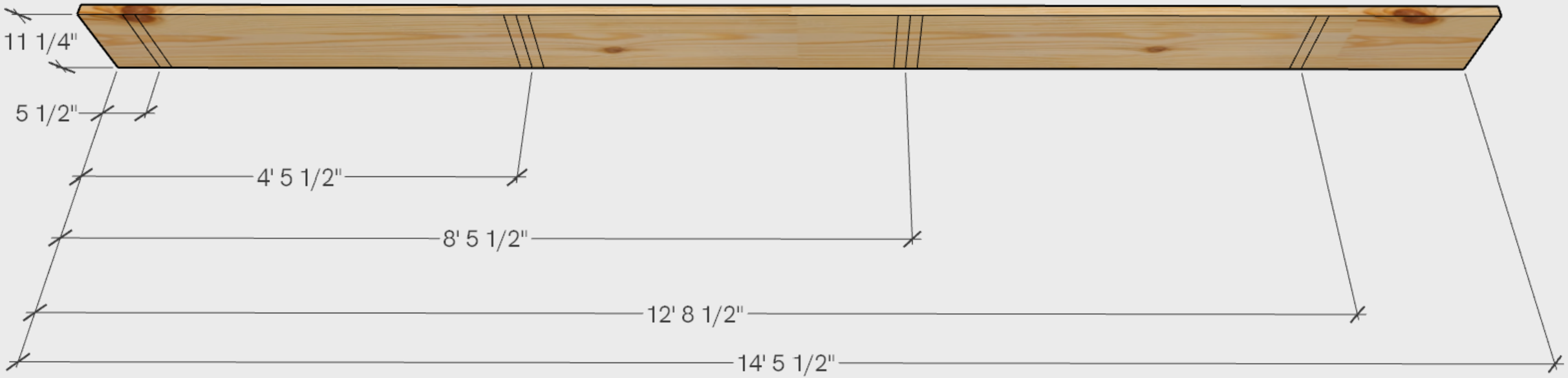

FM121406B

PARTS

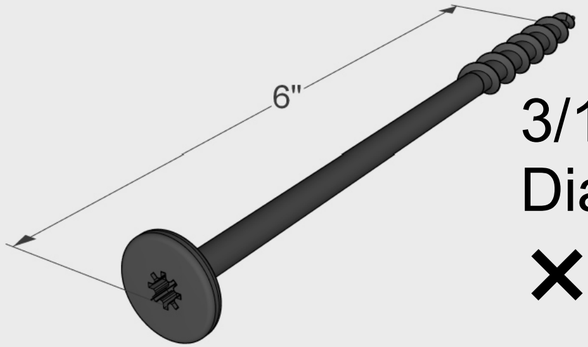

3/16"
Diameter
×8

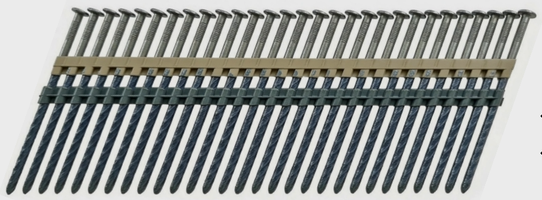

×1

3.25" × 0.131" Collated

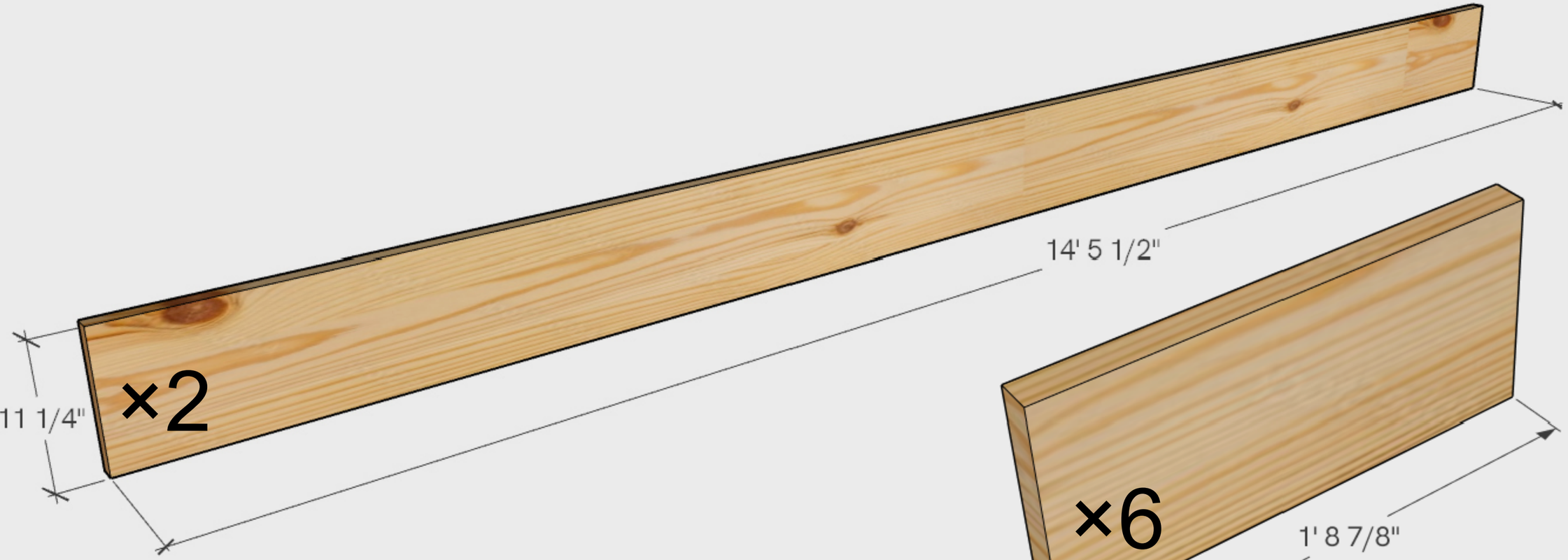

FM121406B

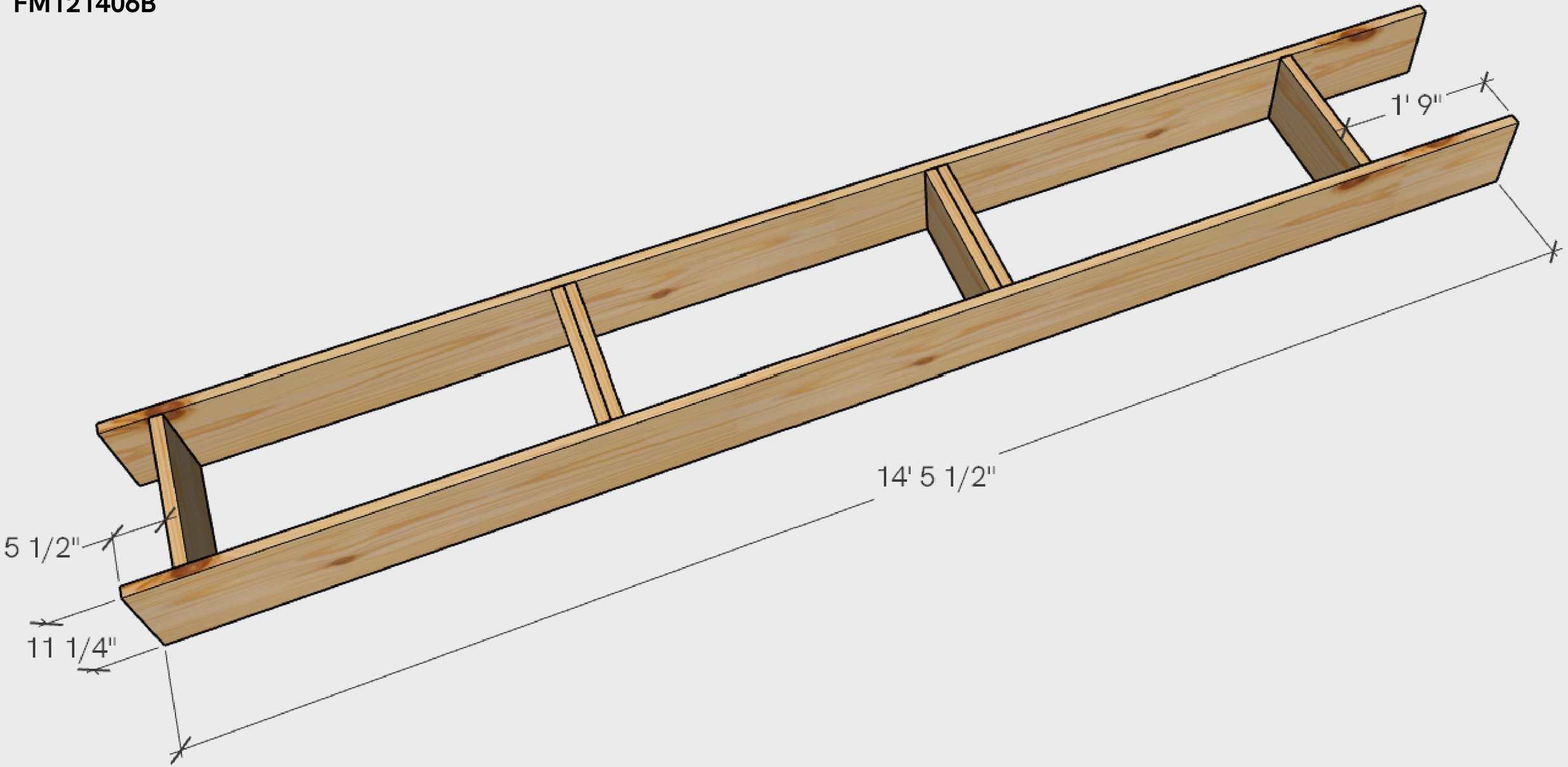

JOIST	SPAN	END 1	END 2	MODULE
2x12	14'	2x6 IFS Wall	2x6 IFS Wall	**FM12140606**

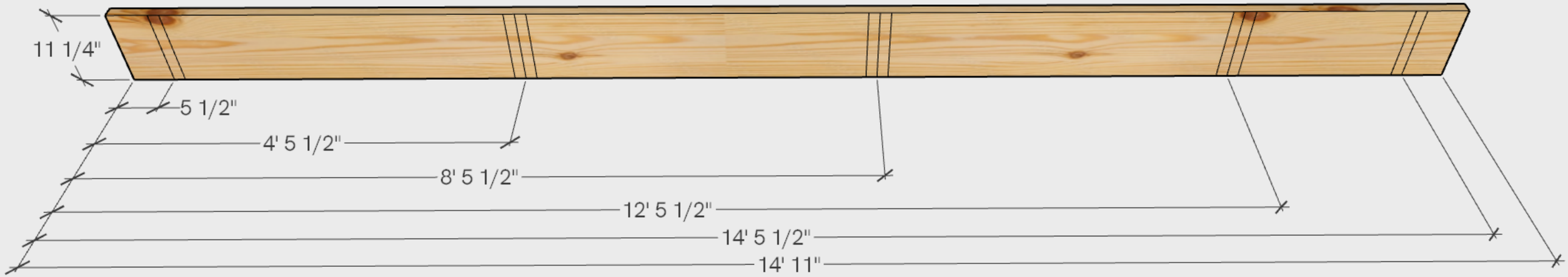

FM12140606

PARTS

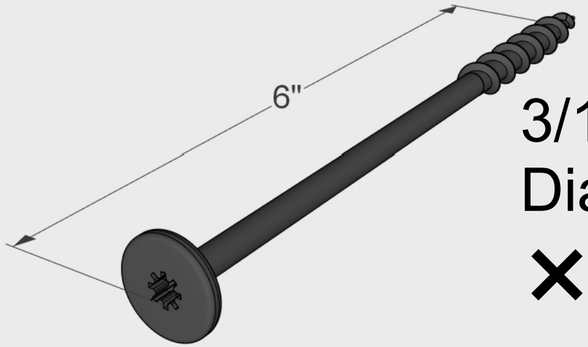

3/16"
Diameter
×8

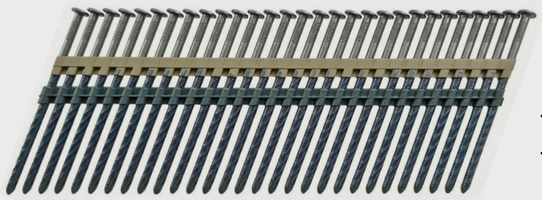

×1

3.25" × 0.131" Collated

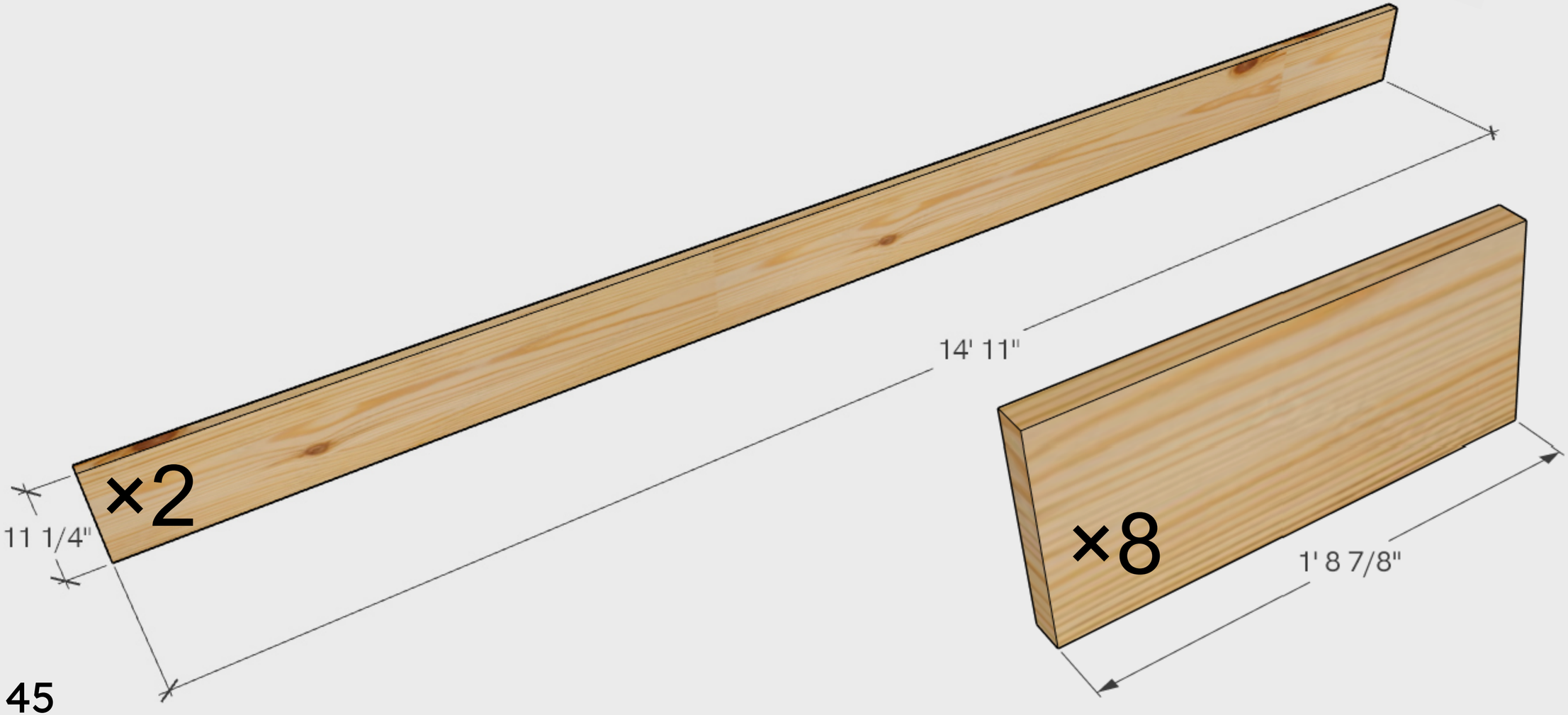

imagine cabins

